ORDER NO. CPD0010001C0

Service Manual

Notebook Computer

CF-72

TOUGHBOOK

This is the Service Manual for the following areas.

M ...for U.S.A. and Canada
E ...for U.K.
G ...for Germany
F ...for France
S ...for Sweden
T ...for Italy
P ...for Spain

Model Number Reference

The models in the CF-72 series are numbered in accordance with the types of the CPU, LCD and HDD etc. featured by the product.

Model No.CF-72 □ □ □ □ Z □ □

CPU type
N: for Intel® Mobile Pentium® III Processor 700 MHz

LCD type
3: for 13.3" TFT Color

HDD type / RAM size
F: 20 GB / 128 MB

Area
M: for U.S.A. and Canada
E: for U.K.
G: for Germany
F: for France
S: for Sweden
T: for Italy

Operating System
C: Microsoft® Windows NT®
D: Microsoft® Windows® 2000
E: Microsoft® Windows® 98

Drive
B: CD-ROM drive
C: CD-ROM drive / SuperDisk drive

⚠ WARNING

This service information is designed for experienced repair technicians only and is not designed for use by the general public. It does not contain warnings or cautions to advise non-technical individuals of potential dangers in attempting to service a product. Products powered by electricity should be serviced or repaired only by experienced professional technicians. Any attempt to service or repair the product or products dealt with in this service information by anyone else could result in serious injury or death.

Panasonic®

© 2000 Matsushita Electric Industrial Co., Ltd. All rights reserved. Unauthorized copying and distribution is a violation of law.

WARNINGS

For U.K.

FOR YOUR SAFETY PLEASE READ THE FOLLOWING TEXT CAREFULLY
This appliance is supplied with a moulded three pin mains plug for your safety and convenience.
A 3 amp fuse is fitted in this plug.
Should the fuse need to be replaced please ensure that the replacement fuse has a rating of 3 amps and that it is approved by ASTA or BSI to BS 1362.

Check for the ASTA mark or the BSI mark on the body of the fuse.
If the plug contains a removable fuse cover you must ensure that it is refitted when the fuse is replaced.
If you lose the fuse cover the plug must not be used until a replacement cover is obtained.
A replacement fuse cover can be purchased from your local Panasonic Dealer.
IF THE FITTED MOULDED PLUG IS UNSUITABLE FOR THE SOCKET OUTLET IN YOUR HOME THEN THE FUSE SHOULD BE REMOVED AND THE PLUG CUT OFF AND DISPOSED OF SAFELY.
THERE IS A DANGER OF SEVERE ELECTRICAL SHOCK IF THE CUT OFF PLUG IS INSERTED INTO ANY 13 AMP SOCKET.
If a new plug is to be fitted please observe the wiring code as shown below.
If in any doubt please consult a qualified electrician.
Important
The wires in this mains lead are coloured in accordance with the following code:
Blue: Neutral
Brown: Live
As the colours of the wires in the mains lead of this apparatus may not correspond with the coloured markings identifying the terminals in your plug, proceed as follows:
The wire which is coloured Blue must be connected to the terminal which is marked with the letter N or coloured BLACK.
The wire which is coloured Brown must be connected to the terminal which is marked with the letter L or coloured RED.
Under no circumstances should either of these wires be connected to the earth terminal of the three pin plug, marked with the letter E or the Earth Symbol ⏚.

The mains plug on this equipment must be used to disconnect the mains power.
Please ensure that a socket outlet is available near the equipment and shall be easily accessible.

■ How to replace the fuse

Open the fuse compartment with a screw driver and replace the fuse.

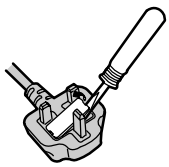

Warnings
- This equipment is not designed for connection to an IT power system.
  (An IT system is a system having no direct connections between live parts and Earth; the exposed conducive parts of the electrical installation are earthed.
  An IT system is not permitted where the computer is directly connected to public supply systems in the U.K.)
- Disconnect the mains plug from the supply socket when the computer is not in use.

This equipment is produced to BS800/1983.

LITHIUM BATTERY ⚠

• **CAUTION**

Danger of explosion if battery is incorrectly replaced.
Replace only with the same or equivalent type recommended by the equipment manufacture.
Discard used batteries according to the manufacturer's instructions.

LITHIUMBATTERIES ⚠

Vorsicht!

Explosionsgefahr bei unsachgemäßem Austausch der Batterie. Ersatz nur durch denselben order einen vom Hersteller empfohlenen ähnlichen Typ. Entsorgung gebrauchter Batterien nach Angaben des Herstellers.

PILE AU LITHIUM ⚠

ATTENTION: IL Y A DANGER D'EXPLOSION S' IL Y A REMPLACEMENT INCORRECT DE LA PILE. REMPLACER UNIQUEMENT AVEC UNE PILE DU MÈME TYPE OU D'UN TYPE RECOMMANDÉ PAR LE CONSTRUCTEUR. METTRE AU RÉBUT LES PILES USAGÉES CONFORMÉMENT AUX INSTRUCTIONS DU FABRICANT.

LASER SAFETY INFORMATION

For U.S.A.

Class 1 LASER-Product

This product is certified to comply with DHHS Rules 21 CFR Subchapter J.
This product complies with European Standard EN60825 (or IEC Publication 825).

For all areas

This equipment is classified as a class 1 level LASER product and there is no hazardous LASER radiation.

Caution:

(1) Use of controls or adjustments or performance of procedures other than those specified herein may result in hazardous radiation exposure.
(2) The drive is designed to be incorporated into a computer-based system or unit which has an enclosing cover. It should never be used as a stand alone drive.

Danger:

The serviceman should not remove the cover of drive unit and should not service because the drive unit is a non-serviceable part.

• Unplug the AC power cord to the equipment before opening the top cover of the drive.
• When the power switch it on, do not place your eyes close to the front panel door to look into the interior of the unit.

LASER Specification

Class 1 level LASER Product
Wave Length : CD 790+25, -15 nm

Laser safety information is appropriate only when drive with laser is installed.

Contents

1. Specifications **1-1, 1-2**
2. Name and Functions of Parts **2-1, 2-2**
3. Technical information ..... **3-1~3-4**
3.1. System Overview 3-1, 3-2
3.2. System Memory Map 3-3
3.3. I/O Address Map 3-4
4. Diagnosis Procedure ..... **4-1~4-15**
4.1. Basic Procedures 4-1
4.2. Power-On Self Test (Boot Check) 4-2
4.3. List of Error Codes 4-3, 4-4
4.4. Diagnosis Map ..... 4-5~4-13
5. Diagnostic Test ..... **5-1~5-15**
5.1. Diagnostic Test Procedure ..... 5-1~5-9
5.2. Error Message ..... 5-10~5-15
6. Disassembly/Reassembly ..... **6-1~6-8**
6.1. Removing the Battery Pack 6-1
6.2. Removing the HDD Unit 6-1
6.3. Removing the Palmrest Unit, the PAD PCB and the Touch Pad 6-1
6.4. Removing the RAM Card 6-2
6.5. Removing the Keyboard 6-2
6.6. Removing the LCD Section and the Center Cover 6-3
6.7. Removing the LCD Section and the LED PCB 6-4
6.8. Removing the PCB Case Unit 6-4
6.9. Removing the Bottom Case Unit and the Handle Unit 6-4
6.10. Removing the CD-ROM Drive 6-4
6.11. Removing the Main PCB 6-5
6.12. Removing the Fan and the Fan Heat Angle 6-5
6.13. Removing the Sub PCB 6-6
6.14. Removing the LID PCB 6-6
6.15. Removing the Bus Shutter Unit and the Card Shutter Unit 6-6
6.16. Removing the PCMCIA CN (PC Card Slot) and RTC Battery 6-6
6.17. Removing the LCD Unit and the Inverter PCB 6-7
6.18. Removing the LCD Lock and the LCD Lock Spring 6-8
7. Wiring Connection Diagram **7-1**
8. Exploded Views ..... **8-1~8-5**
9. Replacement Parts List ..... **9-1~9-15**
9.1. CF-72 ..... 9-1~9-13
9.2. CD-ROM Drive CF-VCD711 9-14
9.3. SupperDisk Drive CF-VFS712W 9-15

1. Specifications

This page provides the specifications for the basic model CF-72N3FxZxx. The model number will change depending on the configuration of the unit, such as, CPU speed, memory size, HDD size and Operating System.

To check the model number:
Check the bottom of the computer or the box the computer came in at the time of purchase.

To check CPU speed:
Use DMI Viewer in [Start] - [Programs] - [Panasonic] - [DMI Viewer].

To check memory size and hard disk drive (HDD) size:
1 Run the Setup Utility.
2 The memory size is confirmed in [System Memory] of the [Main] menu. The hard disk drive size is confirmed in [Primary Master] of the [Main] menu.

● Main Specifications

Model No.		CF-72N3FxZxx
CPU		Mobile Pentium® III Processor 700 MHz featuring Intel® SpeedStep™ Technology L1 Cache Memory: 32 KB L2 (Second) Cache Memory: 256 KB
Memory (Expandable to)		128 MB (384 MB Max.)
Video Memory		8 MB
LCD	**Type**	13.3 type (TFT)
	Displayed Colors*1	256/65536/16M colors (640 x 480 dots/800 x 600 dots/1024x768 dots)
Hard Disk Drive		20 GB*2
Operating System		Microsoft® Windows® 98 Second Edition (for CF-72xxxxxEX) Microsoft® Windows® 2000 (for CF-72xxxxxDx) Microsoft® Windows® NT (for CF-72xxxxxCx)

*1 A 16M color display is achieved by using the dithering function.
*2 1GB = 10^9 bytes

● Other Specifications

Keyboard	87 keys			
SuperDisk Drive	720 KB/1.44 MB/120MB (for CF 72xxxCxxx)			
CD-ROM Drive	24X speed (Max.)			
Slots	PC Card Slots	Two Type I or Type II, or one Type III		
		Allowable current (total for two slots)	3.3 V: 400 mA, 5 V: 400 mA,	
	RAM Module Slot*1	144-pin, 3.3-V, SO-DIMM, SDRAM, PC100 Compliant		
Interface	Parallel Port	Dsub 25-pin female		
	External Display Port	Mini Dsub 15-pin female		
	Serial Port	Dsub 9-pin male		
	Microphone Jack*2	Miniature jack, 3.5 DIA		
	Headphone Jack	Miniature jack, 3.5 DIA Impedance 32 Ω, Output Power 4 mW x 2		
	Infrared Communication Port	IrDA 1.1 compliant, 4 Mbps data transmission speed*3		
	External Keyboard/Mouse Port	Mini DIN 6-pin female		
	Expansion Bus Connector	Dedicated 100-pin female		
	USB Port	4-pin x 2		
	Internal Modem	Data: 56 kbps(V.90 & K56flex) FAX:14.4 kbps		
Pointing Device	Touch Pad			
Speaker	Speaker (built in) x 4			
Utility Programs	Setup Utility, DMI Viewer, Panasonic Hand Writing*4			
Sound	HRTF 3D positional audio support 16-bit stereo, WAVE and MIDI playback			
Battery — **Battery Pack**	Li-ion 10.8 V, 3.0 Ah			
	Operating Time*5	Approx. 1.0 hours - 6.0*6 hours		
	Charging Time*5	Power On	Approx. 4.0 hours	
		Power Off	Approx. 3.0 hours	
Battery — **Clock Battery**	Coin type lithium battery 3.0 V			
AC Adaptor*8	Input	100 V - 240 V AC, 50 Hz/60 Hz	Output	15.6 V DC, 3.85 A
Power Consumption*9	Approx. 40W*9 / Approx. 65 W (maximum when recharging in the ON state)			
Environment	In use	Temperature Humidity	5 ˚C to 35 ˚C*10 {41 ˚F to 95 ˚F} 30% to 80% RH (No condensation)	
	Not in use	Temperature Humidity	-20 ˚C to 60 ˚C {-4 ˚F to 140 ˚F} 30% to 90% RH (No condensation)	
Physical Dimensions (W X H X D)	297 mm X 44.5 mm X 265.6 mm {11.7 " X1.8 " X 10.5 "} (including the carrying handle)			
Weight	Approx. 2.9 kg {Approx. 6.4 lb.} (including the carrying handle)			

<Model with both an internal modem and internal LAN port>

Interface	Internal LAN	IEEE 802.3 10Base-T IEEE 802.3u 100Base-TX

*1 Only a RAM card designed for PC100 can be added.
*2 Use only a monaural condenser microphone.
*3 Separate communications software is necessary.
Windows NT: The infrared data communications can not be used at 4 Mbps data transfer speed.
*4 Only Windows 98
*5 Varies depending on the usage conditions, CPU speed, etc.
*6 When using the Second Battery Pack
*7 The AC adaptor is compatible with power sources up to 240 V AC adaptor.
This computer is supplied with a 125 V AC compatible AC cord.
*8 Approx. 1.5 W when the battery pack is fully charged (or not being charged) and the computer is off.
Approx. 3.0 W when the [Wake up from LAN] has been enabled (models with both an internal modem and internal LAN port).
*9 Rated power consumption.
*10 Consecutive disk access of the SuperDisk Drive Pack between 30˚C and 35˚C {86 ˚F and 95 ˚F} for 15 minutes or more may damage the data on the disk.

2. Names and Functions of Parts

The illustrations shown may differ from the actual physical appearances.

LCD

Function Keys

Touch Pad

LED Indicators

- Caps Lock
- Numeric key (NumLk)
- Scroll lock (ScrLk)
- Hard disk status
- Multimedia pocket device status

Internal Modem

Microphone Jack

Use only a monaural condenser microphone. Using an input source other than a monaural condenser microphone may not allow audio to be input or may damage the equipment.

Headphone Jack

Use this connector to connect headphones or amplifier-equipped speakers. Audio output from the internal speaker is disabled when headphones or external speakers are connected.

Carrying Handle

For enhanced portability and in-the-field efficiency.

Security Lock LOCK

A cable can be connected to prevent theft of your computer. For more information, read the manual that comes with the cable.

Power Switch

Before using the computer for the first time, carefully read the [Limited Use License Agreement]. If you agree to the conditions, remove the seal.

Speakers

- To adjust the volume , select the on the task bar, then [Volume Control].
  You may also use the function keys to perform this operation (Fn + F5 or F6).
- Speaker on/off : (Fn + F4)

Multimedia Pocket Release Latch MP RELEASE

PC Card Slots

Multimedia Pocket

LED Indicators

- MP Power status of the multimedia pocket
- Main battery pack status
- Power status

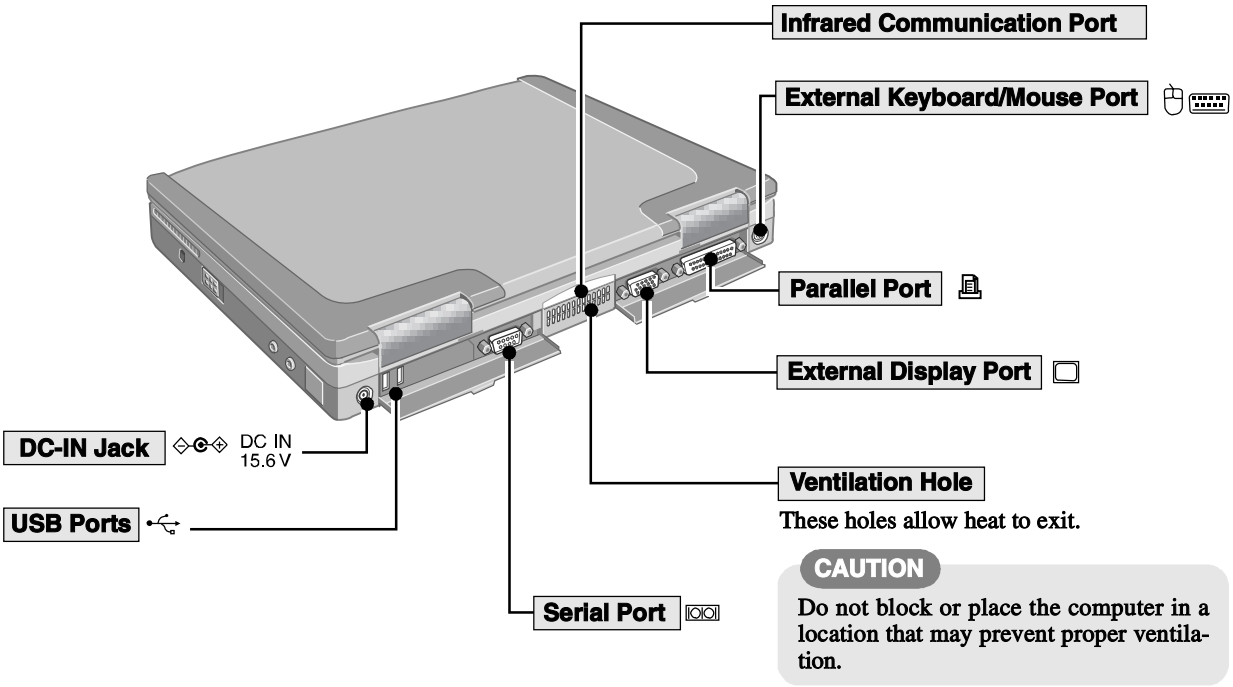
Infrared Communication Port
External Keyboard/Mouse Port
Parallel Port
External Display Port
DC-IN Jack
DC IN
15.6 V
USB Ports
Serial Port
Ventilation Hole
These holes allow heat to exit.
CAUTION
Do not block or place the computer in a location that may prevent proper ventilation.

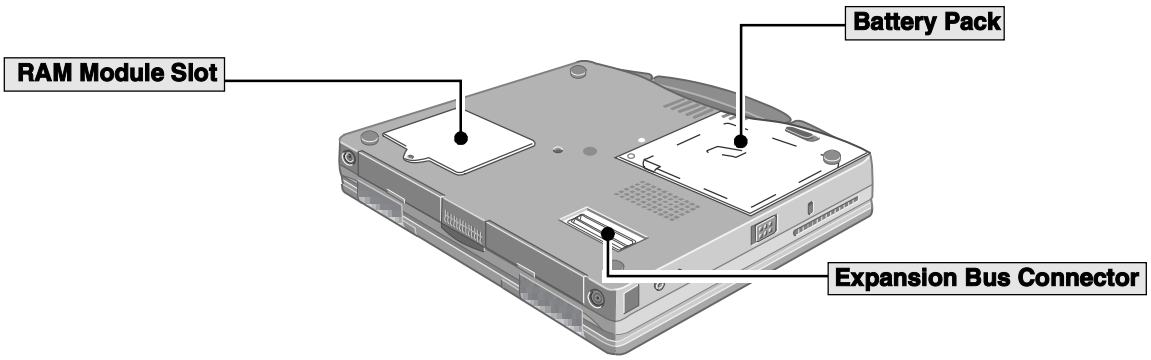
Battery Pack
RAM Module Slot
Expansion Bus Connector

3.Technical Information

3.1 System Overview

3.1.1 System Configuration

The main system is made up of a Main board, a SUB board, a LED board, a PAD board and a LID board. The CPU operates at 1.6V, 1.35V(core)/2.5V; the main memory at 3.3V; the core logic at 3.3V/5V; and the other main chips at 3.3V.

3.1.2 Power Supply System

The power supply used by the Main board is generated on the Main board based on the voltage from the AC adapter.

Power Supply System	Description	On mode	Suspend mode	Off/Hibernation
VC system (VC5, VC3, VC25, VC18, VC16, VC15)	CPU and logic power supply	ON	OFF	OFF
VB system (VB5, VB3)	Logic power supply	ON	ON	OFF
VA system (VA3)	PMC power supply	ON	ON	ON
VPP system (VPP)	12V power supply, for the card slot	ON	OFF	OFF

Table 1: Description of Power Supply Systems

Power is supplied to the AC adapter and battery pack in that order when the RTC power is off or is in suspend mode. When neither power supply can be accessed, power is supplied from the clock battery (RTC battery).

Block Diagrams

Power Supply Configuration Diagram

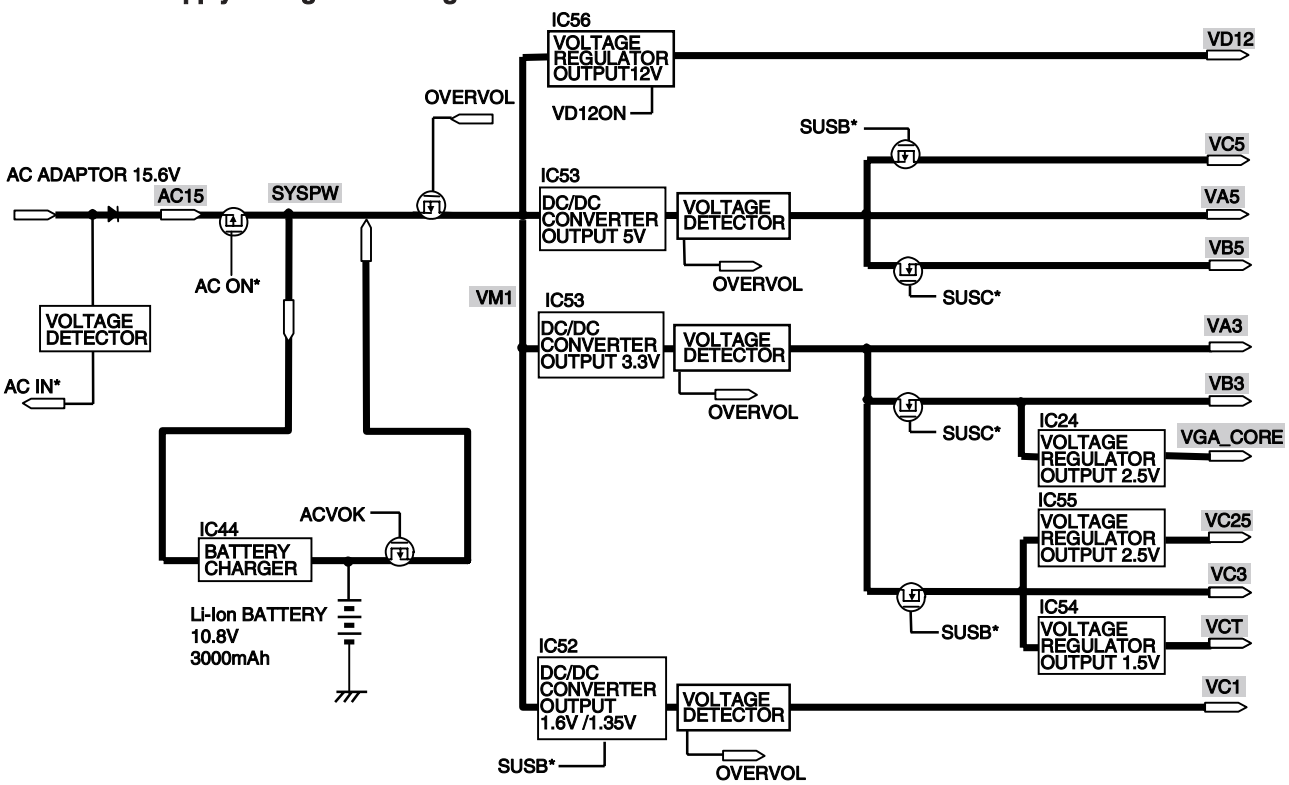

System Configuration Diagram

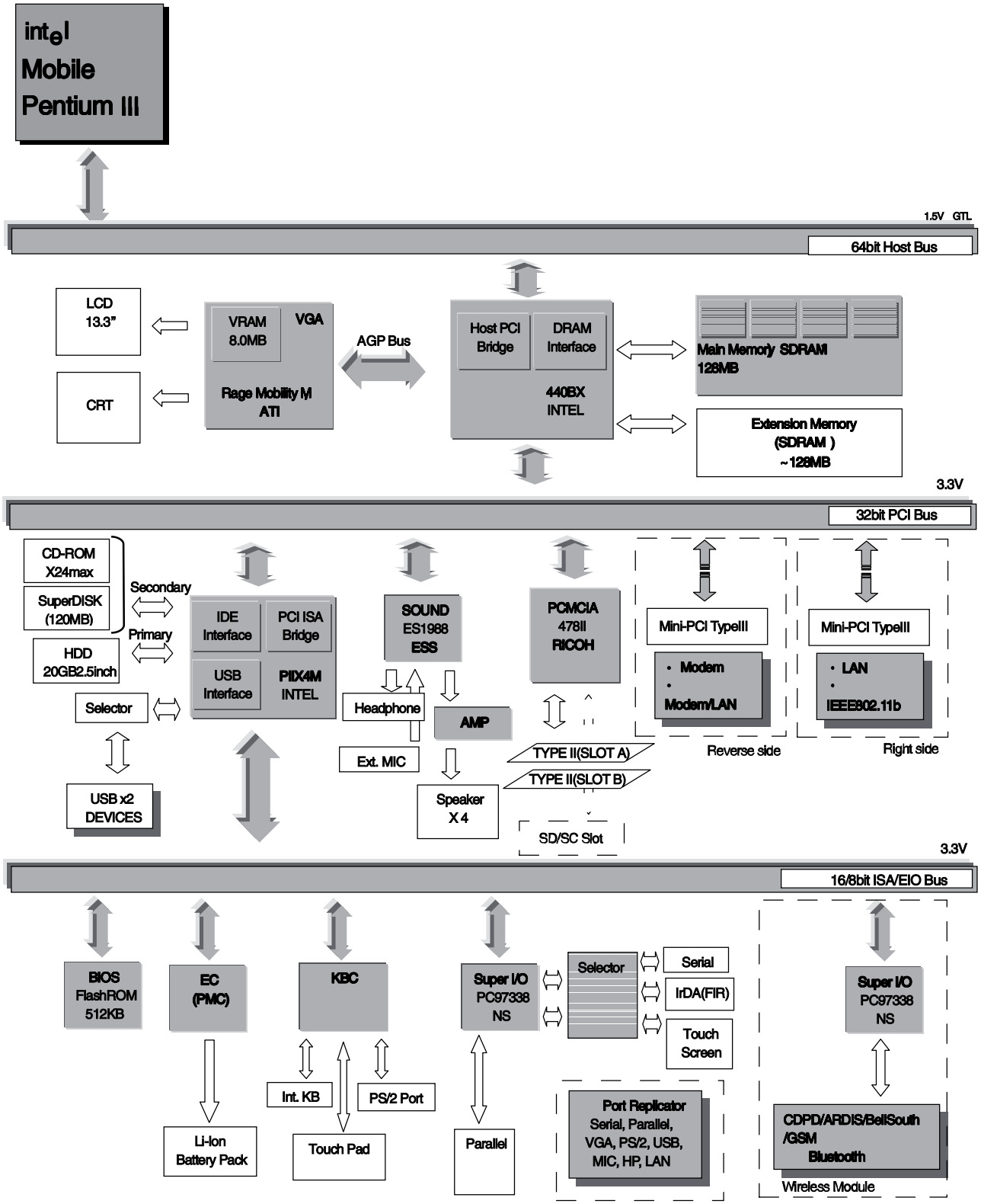

3.2 System Memory Map

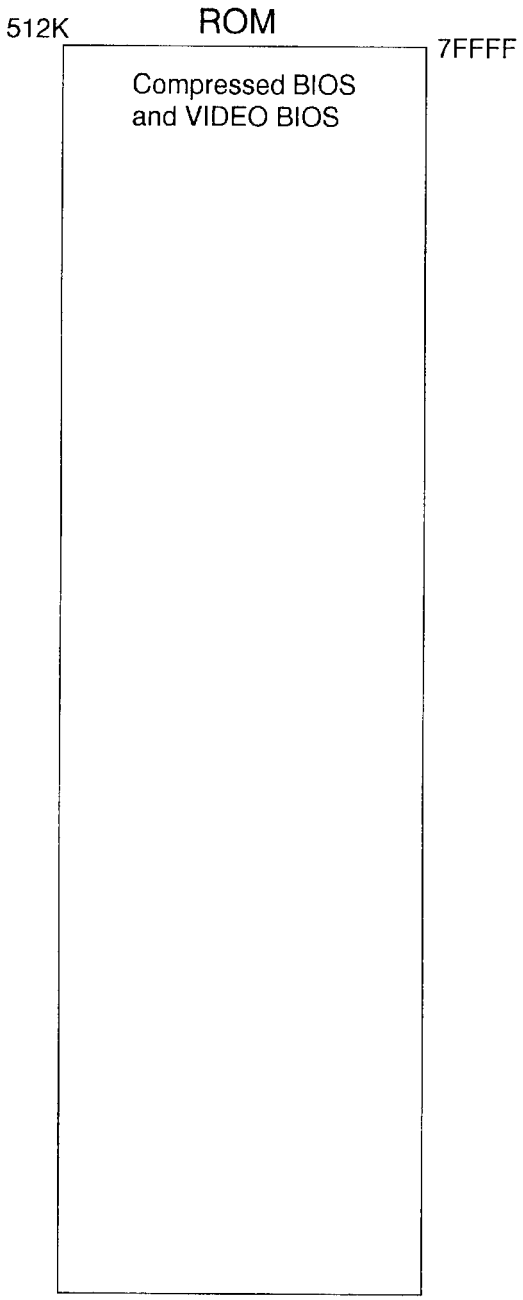

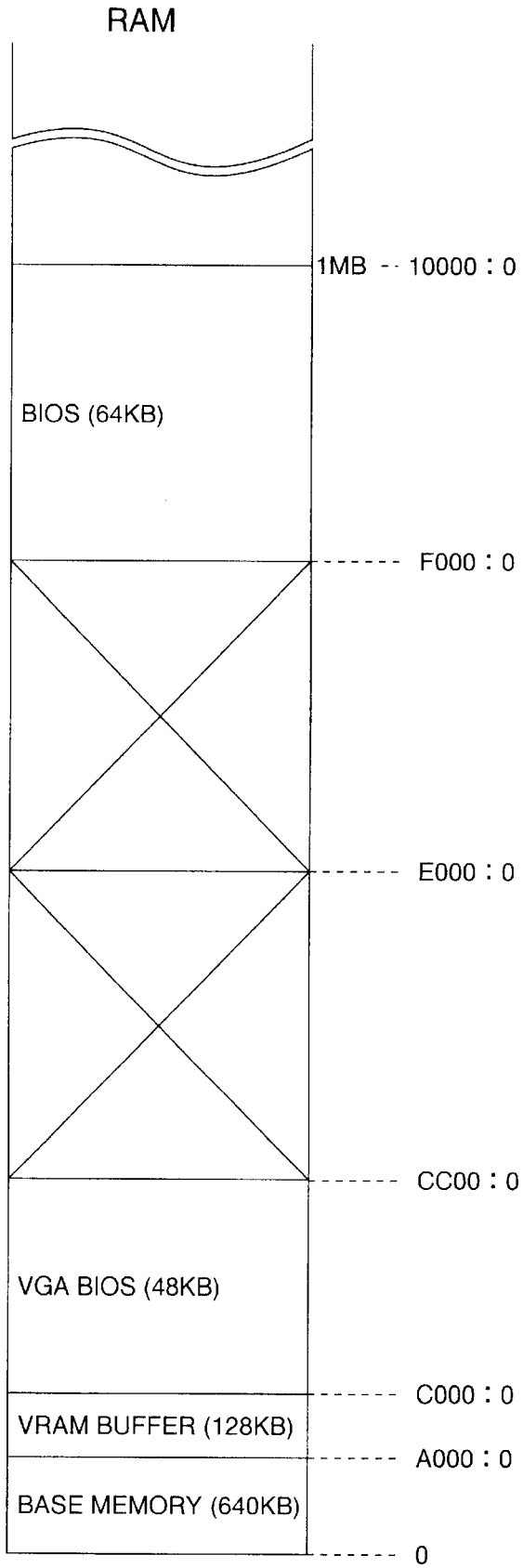

I/O Address Map (CF-72)

Address	Function	IC No,
x0000 - x000F	Direct memory access controller	
x0010 - x0018	Motherboard resources	
x001F - x001F	Motherboard resources	
x0020 - x0021	Programmable interrupt controller	
x0022 - x0022	Motherboard resources	
x0024 - x0025	Motherboard resources	
x0028 - x0029	Motherboard resources	
x002C - x002D	Motherboard resources	
x0030 - x0031	Motherboard resources	
x0034 - x0035	Motherboard resources	
x0038 - x0039	Motherboard resources	
x003C - x003D	Motherboard resources	
x0040 - x0043	System timer	
x0050 - x0052	Motherboard resources	
x0060 - x0060	Standard 101/102-Key or Microsoft Natural Keyboard	
x0061 - x0061	System speaker	
x0062 - x0062	Motherboard resources	
x0064 - x0064	Standard 101/102-Key or Microsoft Natural Keyboard	
x0066 - x0066	Motherboard resources	
x0070 - x0071	System CMOS/real time clock	
x0072 - x0077	Motherboard resources	
x0080 - x0080	Motherboard resources	
x0081 - x008F	Direct memory access controller	
x0090 - x009F	Motherboard resources	
x00A0 - x00A1	Programmable interrupt controller	
x00A4 - x00A5	Motherboard resources	
x00A8 - x00A9	Motherboard resources	
x00AC - x00AD	Motherboard resources	
x00B0 - x00BD	Motherboard resources	
x00C0 - x00DF	Direct memory access controller	
x00F0 - x00FF	Numeric data processor	
x0170 - x0177	Intel 82371AB/EB PCI Bus Master IDE Controller	
x0170 - x0177	Secondary IDE controller (dual fifo)	
x01B0 - x01B1	Motherboard resources	
x01F0 - x01F7	Intel 82371AB/EB PCI Bus Master IDE Controller	
x01F0 - x01F7	Primary IDE controller (dual fifo)	
x0338 - x033F	Infrared PnP Serial Port (*PNP0510)	
x0376 - x0376	Intel 82371AB/EB PCI Bus Master IDE Controller	
x0376 - x0376	Secondary IDE controller (dual fifo)	
x0378 - x037F	ECP Printer Port (LPT1)	
x0398 - x0399	Motherboard resources	
x03B0 - x03BB	RAGE MOBILITY AGP (English)	
x03C0 - x03DF	RAGE MOBILITY AGP (English)	
x03F6 - x03F6	Intel 82371AB/EB PCI Bus Master IDE Controller	
x03F6 - x03F6	Primary IDE controller (dual fifo)	
x03F8 - x03FF	Communications Port (COM1)	
x04D0 - x04D1	Motherboard resources	
x0778 - x077F	ECP Printer Port (LPT1)	
x0CF8 - x0CFF	PCI bus	
x1000 - x103F	Motherboard resources	
x1040 - x104F	Motherboard resources	
x1050 - x1057	Primary IDE controller (dual fifo)	
x1050 - x105F	Intel 82371AB/EB PCI Bus Master IDE Controller	
x1058 - x105F	Secondary IDE controller (dual fifo)	
x1060 - x1067	Lucent Win Modem	
x1400 - x14FF	Lucent Win Modem	
x1800 - x18FF	ESS Allegro PCI Audio (WDM)	
x2000 - x20FF	RAGE MOBILITY AGP (English)	
x2000 - x2FFF	Intel 82443BX Pentium(r) II Processor to AGP controller	
xFC20 - xFC3F	Intel 82371AB/EB PCI to USB Universal Host Controller	
xFE00 - xFE01	Motherboard resources	

4. Diagnosis Procedure

4.1. Basic Procedures

The basic procedures for diagnosis, disassembly, and test of defective parts of a set to be repaired are summarized below. For details, refer to relevant pages in the Service Manual.

● **Flow Chart**

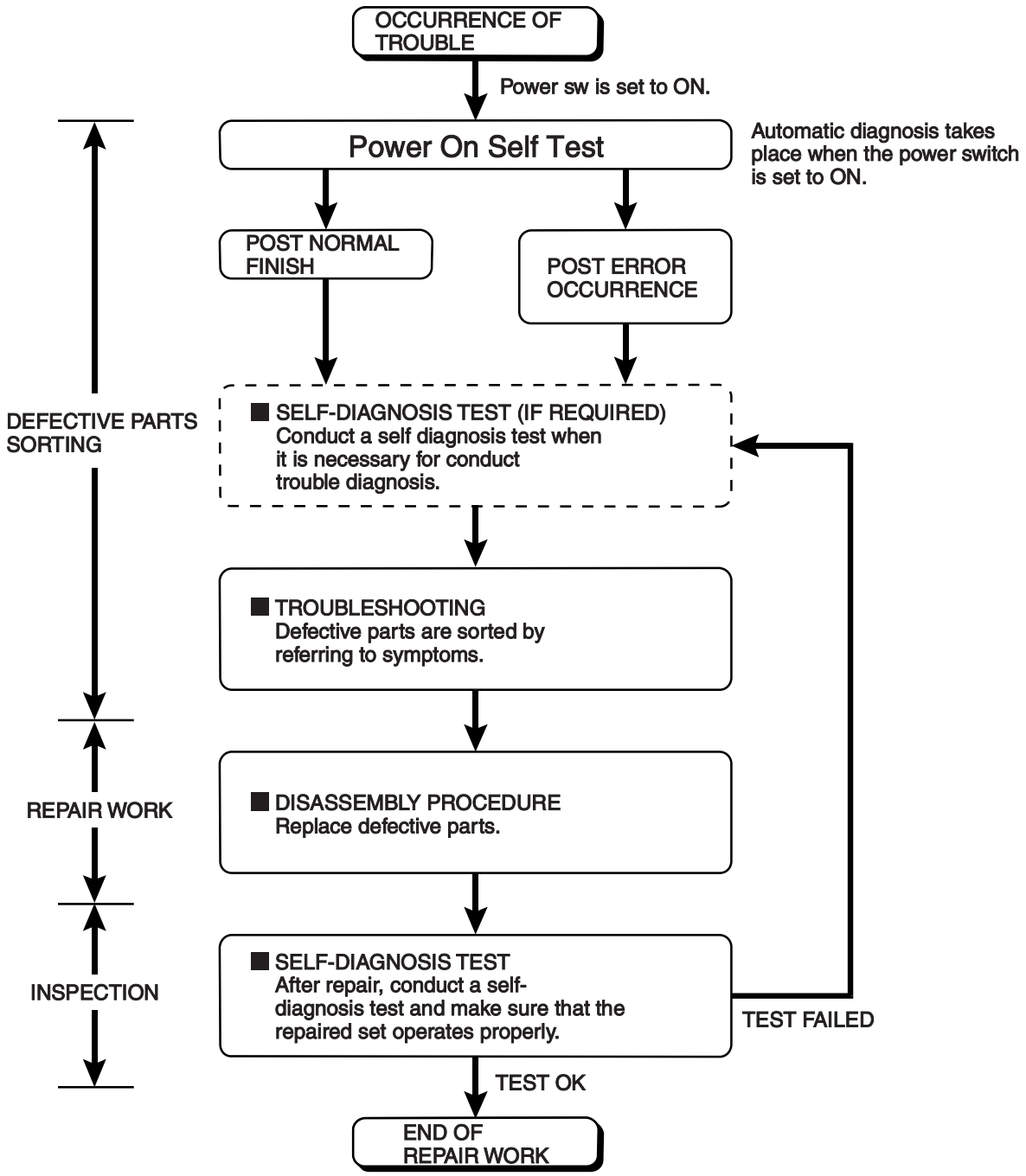

4.2. Power-On Self Test (Boot Check)

4.2.1. Outline of POST

The set has a boot check function called POST (Power-On Self Test) in it. The condition of the main body is diagnosed by checking beep sound or error code.

- Start .....Test begins automatically when power switch is set to ON.
- Normal finish .....After memory checking, a beep sound is issued once and the set is placed into automatic stop.

Note: If no error occurs, nothing is displayed. (No display of OK, etc.)

4.2.2. Error Diagnosis by Checking Beep Signal Sound

The beep sound is as follows:

(1 (long sound) -2-3-4)

(Length of bar shows length of sound.)

▬ = long sound (about 0.4 sec.), ■ = short sound (about 0.2 sec.), Length between sounds is about 0.1 sec.

- **Table of errors classified by beep sounds**

Diagnosis	Beep signal sound	Error message
Main board	1(long sound)-2	BIOS ROM error
	1-2-2-3	BIOS ROM error
	1-3-1-1	RAM error
	1-3-1-3	Keyboard controller error
	1-3-4-1	RAM error
	1-3-4-3	RAM error
	1-4-1-1	RAM error
	2-1-2-3	BIOS ROM error
	2-2-3-1	Occurrence of unexpected offering

(Note) A beep sound is also issued in case of other I/O trouble.

4.3. List of Error Codes

The following is a list of the messages that BIOS can display. Most of them occur during POST. Some of them display informa-tion about a hardware device, e.g., the amount of memory installed. Others may indicate a problem with a device, such as the way it has been configured. Following the list are explanations of the messages and remedies for reported problems.
If your system displays one of except the messages marked below with an asterisk (*), write down the message and contact Panasonic Technical Support. If your system fails after you make changes in the Setup menus, reset the computer, enter Setup and install Setup defaults or correct the error.

0200 Failure Fixed Disk
Fixed disk in not working or not configured properly. Check to see if fixed disk is attached properly. Run Setup. Find out if the fixed-disk type is correctly identified.
0210 Stuck key
Stuck key on keyboard.
0211 Keyboard error
Keyboard not working.
0212 Keyboard Controller Failed
Keyboard controller failed test. May require replacing keyboard controller.
0213 Keyboard locked - Unlock key switch
Unlock the system to proceed.
0230 System RAM Failed at offset : *nnnn*
System RAM failed at offset *nnnn* of in the 64k block at which the error was detected.
0231 Shadow RAM Failed at offset : *nnnn*
Shadow RAM failed at offset *nnnn* of the 64k block at which the error was detected.
0232 Extended RAM Failed at offset : *nnnn*
Extended memory not working or not configured properly at offset *nnn*n.
0250 System battery is dead - Replace and run SETUP
The CMOS clock battery indicator shows the battery is dead. Replace the battery and run Setup to reconfigure the system.
***0251 System CMOS checksum bad - Default configuration used**
System CMOS has been corrupted or modified incorrectly, perhaps by an application program that changes data stored in CMOS. The BIOS installed Default SETUP Values. If you do not want these values, enter Setup and enter your own values. If the error persists, check the system battery or contact Panasonic Technical Support.
0260 System timer error
The timer test failed. Requires repair of system board.
0270 Real time clock error
Real-time clock fails BIOS test. May require board repair.
***0280 Previous boot incomplete - Default configuration used**
Previous POST did not complete successfully. POST loads default values and offers to run Setup. If the failure was caused by incorrect values and they are not corrected, the next boot will likely fail. On systems with control of **wait state**s, improper Setup settings can also terminate POST and cause this error on the next boot. Run Setup and verify that the wait-state configuration is correct. This error is cleared the next time the system is booted.
0281 Memory Size found by POST differed from EISA CMOS
Memory size found by POST differed from EISA CMOS.
02B0 Diskette drive A error
02B1 Diskette drive B error
Drive A: or B: is present but fails the BIOS POST diskette tests. Check to see that the drive is defined with the proper diskette type in Setup and that the diskette drive is attached correctly.
02B2 Incorrect Drive A type - run SETUP
Type of floppy drive A: not correctly identified in Setup.
02B3 Incorrect Drive B type - run SETUP
Type of floppy drive B: not correctly identified in Setup.

02D0 System cache error - Cache disabled
Contact Panasonic Technical Support.
02F0: CPU ID:
CPU socket number for Multi-Processor error.
02F4: EISA CMOS not writable
ServerBIOS2 test error: Cannot write to EISA CMOS.
02F5: DMA Test Failed
ServerBIOS2 test error: Cannot write to extended DMA (Direct Memory Access) registers.
02F6: Software NMI Failed
ServerBIOS2 test error: Cannot generate software NMI (Non-Maskable Interrupt).
02F7: Fail - Safe Timer NMI Failed
ServerBIOS2 test error: Fail-Safe Timer takes too long.
device **address Conflict**
Address conflict for specified *device*.
Allocation Error for: *device*
Run ISA or EISA Configuration Utility to resolve resource conflict for the specified *device*.
Failing Bits : *nnnn*
The hex number *nnnn* is a map of the bits at the RAM address which failed the memory test. Each 1 (one) in the map indicates a failed bit. See error 230,231 or 232 for offset address of the failure in System, Extended or Shadow memory.
Invalid System Configuration Data
Problem with NVRAM (CMOS) data.
I/O device IRQ conflict
I/O device IRQ conflict error.
Operating System not found
Operating system cannot be located on either drive A: or drive C:. Enter Setup and see if fixed disk and drive A: are properly identified.
Parity Check 1 *nnnn*
Parity error found in the system bus. BIOS attempts to locate the address and display it on the screen. If it cannot locate the address, it displays ????. Parity is a method for checking errors in binary data. A parity error indicates that some data has been corrupted.
Parity Check 2 *nnnn*
Parity error found in the I/O bus. BIOS attempts to locate the address and display it on the screen. If it cannot locate the address, it displays ????.
Press <F1> to resume, <F2> to Setup
Displayed after any recoverable error message. Press <F1> to start the boot process or <F2> to enter a Setup and change the settings. Write down and follow the information shown on the screen.

4.4. Diagnosis Map

4.4.1. MAIN UNIT DIAGNOSIS (1/2)

Make sure that connecting cables, connectors and AC adapter are not loose or disconnected prior to testing.

No.	Symptom	Troubleshooting procedures No.	Troubleshooting procedures	Result	Source of problem	Component
1	No power is sent to the unit. (when using AC)	1-1	Is 15V applied to pins 5-8 of Q74? (Whichever one)?	YES	Go to No. 1-6	——
				NO	Go to No. 1-2	——
		1-2	Is 15V applied to pins 1 of Q74?	YES	Go to No. 1-5	——
				NO	Go to No. 1-3	——
		1-3	Is 15V applied to pins 1 of Q70?	YES	Go to No. 1-4	——
				NO	If resistance across L93 terminals is not lower than 1	L21
					If lower than 1	D26
		1-4	Is voltage pin 4 of Q70 lower than 1V?	YES	——	Q70
				NO	If voltage pin 3 of D24 is 15V	R415 Q69
					If lower than 15V	D24
		1-5	Is voltage pin 4 of Q62 lower than 1V?	YES	——	Q62
				NO	If voltage pin 3 of D24 is 15V	Q61
					If lower than 15V	D28, D29 D30, D31
		1-6	Before setting the power switch to ON, check voltage on either side of R260. Is Voltage 3.3V?	YES	If voltage is 0V during the power switch is set to ON, go to No. 1-7	——
					If not 0V	SW801
				NO	If voltage of C5454 is 3.3V	R260
					If lower than 3V	IC58
		1-7	Final Means	—	Main PCB	IC58
	No power is sent to the unit, (When using the Battery Pack)	1-8	Is 8~12V applied to pins 5~8 of Q62? (Whichever one)	YES	Go to No. 1-6	——
				NO	Go to No. 1-5	——
2	Power cuts off during operation.	2-1	Check soldered parts of R389, 390, 403 and R404.	NO	If they show soldered completely	R389, R390 R403, R404
				YES	——	IC58

4.4.2. MAIN UNIT DIAGNOSIS (2/2)

Make sure that connecting cables, connectors and AC adapter are not loose or disconnected prior to testing.

No.	Symptom	Troubleshooting procedures No.	Troubleshooting procedures	Result	Source of problem	Component
1	When a device is selected for "Boot Up Drive", the system boots from a different device.	1-1	Are there system files in the device selected?	YES	Go to No. 1-2	——
				NO	Improper setting	——
		1-2	Does the unit operate normally after replacing the problem device.	YES	Device for which the problem occurred	——
				NO	Main PCB	(HDD) IC13
						(FDD/SDD) IC13 IC23

No.	Symptom	Troubleshooting procedures			Source of problem	Component
		No.		Result		
2	Date or Time cannot be input. Date and Time does not change properly. Date and Time are not displayed.	2-1	Replace the Main PCB.	—	Main PCB	IC3 X2 RTC battery
3	Memory count is too large or too small.	3-1	Replace the Main PCB.	—	Main PCB	IC10～17 IC2
4	No Sound Volume does not work.	4-1	Check software setting.	YES	Software setting	——
				NO	Go to No. 4-2	——
		4-2	Replace the Speakers. Does operation return to normal?	YES	Speakers	——
				NO	Go to No. 4-3	——
		4-3	Replace the Main PCB.	—	Main PCB	IC33 IC35
5	Default configuration in use	5-1	Check configuration.	—	Configuration	——
6	Interrupt controller failure	6-1	———	—	Main PCB	IC3
7	Timer failure	7-1	———	—	Main PCB	——
8	Expansion card ROM checksum error	8-1	Does the system return to normal if the expansion card is removed?	YES	Go to No. 8-2	——
				NO	Main PCB	IC3 IC2
		8-2	Replace the expansion card. Does operation return to normal?	YES	Expansion card	——
				NO	Main PCB	——
9	Real Time Clock failure	9-1	———	—	Main PCB	IC3
10	Dead RTC Battery	10-1	Does resetting through SETUP correct the problem?	YES	Error during SETUP	——
				NO	Go to No. 10-2	——
		10-2	Replace the battery. Does operation return to normal?	YES	Battery	RTC battery
				NO	Main PCB	IC3
11	Configuration error	11-1	Check configuration.	—	Configuration	——
12	CMOS Checksum error	12-1	Were the correct settings selected during SETUP?	YES	Go to No. 12-2	——
				NO	Go to No. 12-4	——
		12-2	Replace the FDD. Does operation return to normal?	YES	FDD	——
				NO	Go to No. 12-3	——
		12-3	Replace the HDD. Does operation return to normal?	YES	HDD	——
				NO	Go to No. 12-4	——
		12-4	Does resetting through SETUP correct the problem?	YES	Error during SETUP	——
				NO	Main PCB	IC3 X2

No.	Symptom	Troubleshooting procedures			Source of problem	Component
		No.		Result		
13	Real time Clock is not updating	13-1	Does resetting the date/time in SETUP correct the problem?	YES	Error during SETUP	——
				NO	Main PCB	IC3
14	Memory size/data error	14-1	Replace the expansion RAM card. Does operation return to normal? (Go to "NO" if not connected.)	YES	Expansion RAM card	——
				NO	Main PCB	IC2 IC10～17
15	PCI failur	15-1	Does the system return to normal if the expansion card is removed?	YES	Go to No. 15-2	——
				NO	Main PCB	IC2
		15-2	Replace the expansion card. Does operation return to normal?	YES	Expansion card	——
				NO	Main PCB	IC2

4.4.3. LCD DIANOSIS

Make sure that connecting cables, connectors and AC adapter are not loose or disconnected prior to testing.

No.	Symptom	Troubleshooting procedures			Source of problem	Component
		No.		Result		
1	No picture appears on the screen.	1-1	Does the LCD display properly after brightness level is adjusted?	YES	Brigntness adjustment	——
				NO	Go to No. 1-2	——
		1-2	Replace the LCD. Does operation return to normal?	YES	LCD	——
				NO	Go to No. 1-3	——
		1-3	Replace the Main PCB. Does operation return to normal?	YES	Main PCB	IC4
				NO	LCD cable	——
2	Display is too dark or too bright.	2-1	Does the LCD display properly after brightness level is adjusted?	YES	Brigntness adjustment	——
				NO	Go to No. 2-2	——
		2-2	Replace the LCD. Does operation return to normal?	YES	LCD	——
				NO	Go to No. 2-3	——
		2-3	Replace the Main PCB. Does operation return to normal?	YES	Main PCB	CN903 IC49
				NO	LCD cable	——
3	Part of the screen does not display properly. Display quality poor. (Fuzzy or slanted, etc.)	3-1	Replace the LCD. Does operation return to normal.	YES	LCD	——
				NO	Go to No. 3-2	——
		3-2	Replace the Main PCB. Does operation return to normal?	YES	Main PCB	IC4
				NO	LCD cable	——
4	Backlight does not turn on.	4-1	Replace the Inverter PCB. Does operation returnt o normal?	YES	Inverter PCB	——
				NO	Go to No. 4-2	——
		4-2	Replace the Inverter cable. Does operation return to normal?	YES	Inverter cable	——
				NO	Go to No. 4-3	——
		4-3	Replace the backlight. Does operation return to normal?	YES	Backlight	——
				NO	Main PCB	CN903 IC49

4.4.4. KEYBOARD, MOUSE or TOUCH PAD DIAGNOSIS

Make sure that connecting cables, connectors and AC adapter are not loose or disconnected prior to testing.

No.	Symptom	Troubleshooting procedures			Source of problem	Component
		No.		Result		
1	Key top cannot be pressed. Key top does not spring back after pressing.	1-1	Keyboard is broken.	—	Keyboard	——
2	None of the keys function. Certain keys do not function.	2-1	Replace the keyboard and see if inputting from the keyboard function normally?	YES	Keyboard	——
				NO	Main PCB	——
3	Input character is displayed as grabage.	3-1	Does the screen mode correspond to the key entry mode?	YES	Go to No. 3-2	——
				NO	Operating mistake	——
		3-2	Is the keyboard setting in the operating system correct?	YES	Go to No. 3-3	——
				NO	Software setting	——
		3-3	Replace the keyboard and see if inputting from the keyboard functions normally.	YES	Keyboard	——
				NO	Main PCB	IC31
4	Mouse does not function. Inputs from the mouse are not accepted properly.	4-1	Replace the mouse. Does operation return to normal?	YES	Mouse	——
				NO	Main PCB	IC31
5	Touch pad not function. Input from the track ball are not accepted properly.	5-1	Replace the touch pad. Does operation return to normal?	YES	Touch Pad	——
				NO	Go to No. 5-2	——
		5-2	Replace the touch pad FPC. Does operation return to normal?	YES	Touch Pad FPC	——
				NO	Main PCB	IC31
6	Keyboard failure	6-1	Is the keyboard properly connected?	YES	Go to No. 7	——
				NO	Keyboard was not connected properly	——
7	Keyboard interface failure	7-1	Replace the keyboard. Does operation return to normal?	YES	Keyboard	——
				NO	Main PCB	IC31

4.4.5. SDD DIAGNOSIS

Make sure that connecting cables, connectors and AC adapter are not loose or disconnected prior to testing.

No.	Symptom	Troubleshooting procedures			Source of problem	Component
		No.		Result		
1	Access lamp does not light.	1-1	Replace the SDD. Does operation return to normal?	YES	SDD	——
				NO	Go to No. 1-2	——
		1-2	Replace the LED PCB. Does operation return to normal?	YES	LED PCB	LD703
				NO	Go to No. 1-3	——
		1-3	Replace the Main PCB. Does operation return to normal?	YES	Main PCB	IC3
				NO	SDD FPC	——
2	Cannot insert floppy disk. Cannot remove floppy disk.	2-1	In the floppy disk warped or bent, or labels interfering?	YES	Floppy disk	——
				NO	SDD	——
3	Does not boot from SDD.	3-1	Are there system files on the media?	YES	Main PCB	IC3
				NO	Software	——
4	Cannot read from floppy disk. Cannot write to floppy disk.	4-1	Is the floppy disk format correct for the operating system currently being used?	YES	Go to No. 4-2	——
				NO	Floppy disk format	——
		4-2	Does this occur for a specific floppy disk?	YES	Floppy disk	——
				NO	Go to No. 4-3	——
		4-3	Try cleaning the disk heads. Does this fix the problem?	YES	Heads were dirty	——
				NO	Go to No. 4-4	——
		4-4	Replace the SDD. Does operation return to normal?	YES	SDD	——
				NO	Go to No. 4-5	——
		4-5	Replace the SDD FPC. Does operation return to normal?	YES	SDD FPC	——
				NO	Main PCB	IC3
5	Floppy disk is scratched or otherwise damaged.	5-1	Try cleaning the disk heads. Does this fix the problem?	YES	Heads were dirty	——
				NO	SDD	——
6	Content of floppy disk is destroyed.	6-1	Was the eject button pressed while the system was accessing the disk?	YES	Operating mistake	——
				NO	Go to No. 6-2	——
		6-2	Replace the SDD. Does operation return to normal?	YES	SDD	——
				NO	Main PCB	IC3
7	Damage to contents written to floppy disk. Damage to contents read from floppy disk.	7-1	Does this occur for a specific floppy disk?	YES	Floppy disk	——
				NO	Go to No. 7-2	——
		7-2	Replace the SDD. Does operation return to normal?	YES	SDD	——
				NO	Go to No. 7-3	——
		7-3	Replace the SDD FPC. Does operation return to normal?	YES	SDD FPC	——
				NO	Main PCB	IC3
8	Abnormal sound.	8-1	Does it sound like the head is moving?	YES	Normal	——
				NO	Go to No. 8-2	——
		8-2	Does the abnormal sound stop when the motor stops running.	YES	SDD	——
				——	——	——
9	Diagnostic Test reports problem in FDC.	9-1	Replace the SDD. Does operation return to normal?	YES	SDD	——
				NO	Go to No. 9-2	——
		9-2	Replace the SDD FPC. Does operation return to normal?	YES	SDD FPC	——
				NO	Main PCB	IC3

4.4.6. HDD DIAGNOSIS

Make sure that connecting cables, connectors and AC adapter are not loose or disconnected prior to testing.

No.	Symptom	Troubleshooting procedures			Source of problem	Component
		No.		Result		
1	Does not boot from HDD.	1-1	Has the HDD been partitioned?	YES	Go to No. 1-2	——
				NO	Improper setting	——
		1-2	Are there system files on the HDD?	YES	Go to No. 1-3	——
				NO	Software on the HDD	——
		1-3	Replace the HDD. Does operation return to normal?	YES	HDD	——
				NO	Go to No. 1-4	——
		1-4	Replace the HDD cable. Does operation return to normal?	YES	HDD cable	——
				NO	Main PCB	IC3
2	Cannot read from HDD. Cannot write to HDD.	2-1	Has the HDD been formatted?	YES	Go to No. 2-2	——
				NO	HDD format	——
		2-2	Replace the HDD. Does operation return to normal?	YES	HDD	——
				NO	Go to No. 2-3	——
		2-3	Replace the HDD cable. Does operation return to normal?	YES	HDD cable	——
				NO	Main PCB	IC3
3	Damage to data written to HDD. Damage to data read from HDD. HDD contents are destroyed.	3-1	Replace the HDD. Does operation return to normal?	YES	HDD	——
				NO	Go to No. 3-2	——
		3-2	Replace the HDD cable. Does operation return to normal?	YES	HDD cable	——
				NO	Main PCB	IC3
4	Dignositic Test reports problem in HDC or HDD.	4-1	Replace the HDD. Does operation return to normal?	YES	HDD	——
				NO	Main PCB	IC3
5	Access lamp does not light.	5-1	Has the HDD been configured in the OS?	YES	Go to No. 5-2	——
				NO	Improper setting	——
		5-2	Replace the HDD. Does operation return to normal?	YES	HDD	——
				NO	Go to No. 5-3	——
		5-3	Replace the LED PCB. Does operation return to normal?	YES	LED PCB	LD907
				NO	Go to No. 5-4	——
		5-4	Replace the Main PCB. Does operation return to normal?	YES	Main PCB	IC3
				NO	HDD cable	——
6	Abnormal sound.	6-1	Replace the HDD.	—	HDD	——
7	Hard disk failure	7-1	Does executing FDISK correct the problem?	YES	Format data destroyed	——
				NO	Go to No. 7-2	——
		7-2	Replace the HDD. Does operation return to normal?	YES	HDD	——
				NO	Go to No. 7-3	——
		7-3	Replace the HDD cable. Does opration return to normal?	YES	HDD cable	——
				NO	Main PCB	IC3

No.	Symptom	Troubleshooting procedures			Source of problem	Component
		No.		Result		
8	An operating system could not be found	8-1	Does executing FDISK correct the problem?	YES	Format data destroyed	——
				NO	Go to No. 8-2	——
		8-2	Replace the HDD. Does operation return to normal?	YES	HDD	——
				NO	Go to No. 8-3	——
		8-3	Replace the HDD cable. Does operation return to normal?	YES	HDD cable	——
				NO	Main PCB	IC3

4.4.7. SERIAL COMMUNICATION DIAGNOSIS

Make sure that connecting cables, connectors and AC adapter are not loose or disconnected prior to testing.

No.	Symptom	Troubleshooting procedures			Source of problem	Component
		No.		Result		
1	Data cannot be sent or received.	1-1	Is the COM port properly set?	YES	Go to No. 1-2	——
				NO	Improper setting	——
		1-2	Is the same transmission protocol set for both the sending and receiving units?	YES	Go to No. 1-3	——
				NO	Improper setting	——
		1-3	Does the RS-232C on the Main PCB operate normally under a loopback test?	YES	Check the interface with the other computer	——
				NO	Main PCB	IC5 IC30
2	Unit will not communicate with another computer when connected directly.	2-1	Is the connection cable a dedicated cross-patched cable?	YES	Go to No. 2-2	——
				NO	Connection cable	——
		2-2	Is the same transmission protocol set for both the sending and receiving units?	YES	Go to No. 2-3	——
				NO	Improper setting	——
		2-3	Does the RS-232C on the Main PCB operate normally under a reverse test?	YES	Check the interface with the other computer	——
				NO	Main PCB	IC5 IC30
3	Unit will not communicate with modem.	3-1	Is the COM port properly set?	YES	Go to No. 3-2	——
				NO	Improper setting	——
		3-2	Is the trasmission protocol correct?	YES	Go to No. 3-3	——
				NO	Improper setting	——
		3-3	Does the modem operate normally under a local analog loopback test?	YES	Line	——
				NO	Go to No. 3-4	——
		3-4	Does the RS-232C on the main board operate normally under a loopback test?	YES	Modem	——
				NO	Main PCB	IC5 IC30
4	Diagnostic Test reports problem in serial port.	4-1	Is the loop back device properly attached to the connector (for an external loop back)?	YES	Main PCB	IC5 IC30
				NO	Improper setting	——

4.4.8. PRINTING DIAGNOSIS

Make sure that connecting cables, connectors and AC adapter are not loose or disconnected prior to testing.

No.	Symptom	Troubleshooting procedures			Source of problem	Component
		No.		Result		
1	Data does not print from the printer.	1-1	Does the printer pass its self-printing test?	YES	Main PCB	IC5
				NO	Printer	——
2	Data prints out incorrectly.	2-1	Does the printer pass its self-printing test?	YES	Go to No. 2-2	——
				NO	Printer	——
		2-2	Is the Parallel Port (Data Direction) setting correct?	YES	Main PCB	IC5
				NO	Improper setting	——
3	The unit hangs after outputting data from the printer.	3-1	Replace the Main PCB. Does operation return to normal?	YES	Main PCB	IC5
				NO	Printer	——
4	Print area is out of line.	4-1	Does the printer pass its self-printing test?	YES	Main PCB	IC5
				NO	Printer	——
5	Data is printed all on one line. (Carriage return does not work.)	4-2	Does the printer pass its self-printing test?	YES	Main PCB	IC5
				NO	Printer	——

4.4.9. CD-ROM Drive DIAGNOSIS

Make sure that connecting cables, connectors and AC adapter are not loose or disconnected prior to testing.

No.	Symptom	Troubleshooting procedures			Source of problem	Component
		No.		Result		
1	Access lamp does not light.	1-1	Replace the CD-ROM drive. Does operation return to normal?	YES	CD-ROM drive	——
				NO	Go to No. 1-2	——
		1-2	Replace the LED PCB. Does operation return to normal?	YES	LED PCB	LD703
				NO	Go to No. 1-3	——
		1-3	Replace the Main PCB. Does operation return to normal?	YES	Main PCB	IC3
				NO	CD-ROM FPC	——
2	Cannot read from DVD.	2-1	Replace the media. Does operation return to normal?	YES	Media	——
				NO	Go to No. 2-2	——
		2-2	Replace the CD-ROM drive. Does operation return to normal?	YES	CD-ROM drive	——
				NO	Main PCB	IC3
3	Tray does not open.	3-1	Replace the CD-ROM drive. Does operation return to normal?	YES	CD-ROM drive	——
				NO	Main PCB	IC3
4	Abnormal sound.	4-1	Replace the media. Does operation return to normal?	YES	Media	——
				NO	CD-ROM drive	——

4.4.10. INFRARED CCOMMUNICATION PORT DIAGNOSIS

Make sure that connecting cables, connectors and AC adapter are not loose or disconnected prior to testing.

No.	Symptom	Troubleshooting procedures			Source of problem	Component
		No.		Result		
1	Data cannot be sent or received.	1-1	Is the Infrared Communication Port enabled in Setup?	YES	Go to No. 1-2	——
				NO	Improper setting	——
		1-2	Is the same transmission protocol set for both the sending and receiving units?	YES	Go to No. 1-3	——
				NO	Improper setting	——
2	Transmitted data becomes corrupted.	2-1	Is the transmission distance within 20-50 cm?	YES	Go to No. 2-2	——
				NO	Use within specified distance	——
		2-2	Is the transmisson path clear of obstacles and interference? Is the unit operated away from TV sets, video, wireles headphones, incandescent lamps or other electronic equipment? Is the unit operated away from direct sunlight?	YES	Main PCB	IC5 IC21
				NO	Change operating environment	——

5. Diagnostic Test

5.1 Diagnostic Test Procedure

5.1.1 Equipment

(1) Test Computer ..... 1 unit
(2) AC Adapter ..... 1 pc.
(3) External Printer ..... 1 unit
(4) Loopback Plug (Parallel Port Test) [P/N: DFWV95C0081] ..... 1 pc.
(5) Loopback Plug (Serial Port Test for RS232C) [P/N: DFWV95C0067] ..... 1 pc.
(6) Floppy Disk containg file DIAG ..... 1 pc.

5.1.2 Preparation

(1) Connect the AC Adapter and External Printer to the computer.
(2) The System Setup should be set to the factory setting values by executing the "SETUP UTILITY" which can be invoked by F2 key at the POST.
If not, the messages and items of the diagnostic test may not be displayed properly on the LCD.
(3) The serial port must be enabled in the "SETUP UTILITY" in order to execute the "1st SERIAL PORT" test.
(4) Connect the serial loopback plug.
(5) In order to test the parallel port with Loopback Plug, disconnect the printer cable and connect the parallel loopback plug with Power OFF.

5.1.3 NOTICE

When "Enter password" is displayed, use "Password Skipping Plug" in order to skip the user password.

1) Connect the parallel plug to the parallel port.
2) Connect the PS/2 mouse plug to the mouse port.
3) Power on the computer.

The wiring of the parallel plug is described below.
Connect pins 2-5-6-8-11-13-15-18-19-20-21-22-23 to Shield GND (PS/2 mouse plug pin 3.)
Connect pins 3-4-7-9-10-12 to VC5 (PS/2 mouse plug pin 4) with 4.7KW each.

CAUTION

The plug described above must be used for servicing purpose only.
Do not use it for other than the above purpose and ensure that it remains confidential.
Using the plug enables the user to skip the previous password and disable the password.

5.1.4 Test Procedure

Use the floppy disk containing file diag48.

Press [D] [I] [A] [G] [4] [8] and [Enter] keys.

DIAGNOSTIC MENU (V*.*L**)

1. TEST ALL DEVICES (■ DEVICES)
2. TEST AUTOMATICALLY (■ DEVICES)
3. EXIT
■ 4. MAIN BOARD
■ 5. xxxxxKB RANDOM ACCESS MEMORY
■ 6. KEYBOARD
7. TRACK BALL/MOUSE
■ 8. BATTERY PACK
■ 9. VIDEO
■ 10. 1 HARD DISK DRIVE(S)
■ 11. 1 FLOPPY DISK DRIVE(S)
12. 1 PARALLEL PORT(S)
■ 13. 1 SERIAL PORT(S)
■ 14. PCCARD CONTROLLER
■ 15. INFRARED COMMUNICATION PORT
■ 16. CD-ROM DRIVE

SELECT MENU : _

Select test item, Press number and Enter keys.

1) MAIN BOARD TEST

Press (4) and (Enter) keys.

```
MAIN BOARD TEST
```

(Normal Message) : Test done ! ! Hit any key when ready._

When an error message is displayed, refer to [5.2 Error Message].

2) xxxxxKB RANDOM ACCESS MEMORY TEST

Press (5) and (Enter) Keys.

```
BASE RAM TEST
    CURRENT BASE RAM SIZE = 640KB
    640KB   OK
EXTENDED RAM TEST
    CURRENT EXTENDED RAM SIZE = xxxxxKB
    xxxxxKB   OK
```

(Normal Message) : Test done ! ! Hit any key when ready._

When an error message is displayed, refer to [5.2 Error Message].

3) KEYBOARD TEST

Press (6) and (Enter) keys.

```
KEYBOARD
    1.  TEST ALL DEVICES       ( ■ DEVICES)
    2.  TEST AUTOMATICALLY  ( ■ DEVICES)
    3.  EXIT
    4.  PRESS KEY TEST
■   5.  SCAN CODE RETURN TEST
SELECT MENU : _
```

For 4. PRESS KEY TEST.

Press (4) and (Enter) Keys.

```
PRESS KEY TEST
    1. TEST ALL DEVICES       ( ■ DEVICES)
    2. TEST AUTOMATICALLY  ( ■ DEVICES)
    3. EXIT
    4. U.S.A.
    5. U.K.
    6. SWEDEN
    7. JAPAN
    8. GERMANY
    9. FRANCE
    10. ITALY
    11. SPAIN
    12. SWISS  (Gr)
SELECT MENU : _
```

For 4. U.S.A..

Press (4) * and (Enter) keys.

```
KEYBOARD TEST
    Press each key for character replacement
    If correct, press "Y" and "ENTER"
    If not correct, press "N" and "ENTER"
```

*Note: Press appropriate number accordingto the keyboard layout.

(Normal Message): Keyboard is OK Press any key when ready._

When an error message is displayed, refer to [5.2 Error Message].

For 5. SCAN CODE RETURN TEST.

Press (5) and (Enter) keys.

```
KEYBOARD  RETURN  CODE  TEST
```

Immediately after this message is displayed,press the key of the test you would like toperform.
(The routine will terminate if no entry is pressed.)

Press any key. (Normal message) : KEY Key has been hit or broken (F10)

SCAN code : xx

Test done ! ! Press any key when ready._

When an error message is displayed, refer to [5.2 Error Massage].

4) POINTING DEVICE

Press (7) and (Enter) keys.

```
Track Ball/Mouse Test
Left button      OFF
Right button     OFF
Is this correct  ?  (Y/N)
```

1. If the condition is normal, the cursor moves according to the movement of the mouse.
2. Pressing the button on the left or right side of the mouse causes display to change from OFF to ON.

5) BATTERY PACK TEST

Press (8) and (Enter) keys.

```
BATTERY PACK TEST
Battery Pack : exists.
AC Adaptor : connected (Not connected)
```

(Normal message) : Test done ! ! Press any key when ready._
When an error message is displayed, refer to [5.2 Error Massage].

6) VIDEO TEST

Press (9) and (Enter) keys.

```
VIDEO
        1. TEST ALL DEVICES        ( ■ DEVICES)
        2. TEST AUTOMATICALLY      ( ■ DEVICES)
        3. EXIT
    ■   4. VGA COLOR MODE TEST
    ■   5. VGA MONO MODE TEST
    ■   6. S-VGA COLOR MODE TEST

SELECT MENU : _
```

*Use these tests to look at the screen and verify that the LCD screen is displaying properly,.

Select the desired test item, and execute by the (Enter) key.

7) 1 HARD DISK DRIVE(S) TEST

Press (10) and (Enter) keys.

```
1st HARD DISK DRIVE(S)
        1. TEST ALL DEVICES        ( ■ DEVICES)
        2. TEST AUTOMATICALLY      ( ■ DEVICES)
        3. EXIT
    ■   4. HARD DISK CONTROLLER TEST
    ■   5. 1st HARD DISK DRIVE TEST
SELECT : _
```

For 4. HARD DISK CONTROLLER TEST. .

Press (4) and (Enter) keys

```
HARD DISK CONTROLLER TEST
```

(Normal Message) : Test done ! ! Press any key when ready._
When an error message is displayed, refer to [5.2 Error Message].

For 5. 1st HARD DISK DRIVE TEST.

Press (5) and (Enter) keys.

```
1st HARD DISK DRIVE TEST
        1. TEST ALL DEVICES        ( ■ DEVICES)
        2. TEST AUTOMATICALLY      ( ■ DEVICES)
        3. EXIT
    ■   4. HDD - DRIVE TEST
        5. HDD - READ/WRITE TEST
    ■   6. HDD - SEQUENTIAL SEEK TEST
    ■   7. HDD - RANDOM SEEK TEST
SELECT : _
```

For 4. HDD - DRIVE TEST.

Press (4) and (Enter) keys.

```
1st HDD - DRIVE TEST
Count value to get SEEK COMPLETE = 0
```

(Normal Message) : Test done ! ! Press any key when ready._

When an error message is displayed, refer to [5.2 Error Message]

For 5. HDD - READ/WRITE TEST.

Press (5) and (Enter) keys.

```
1st HDD - READ/WRITE TEST
    xxxxxxxxxxxxxxxxxxxxxx Warning ! ! ! xxxxxxxxxxxxxxxxxxxxx
        Reserved cylinder for DIAGNOSTICS will lose its data.
        Reserved cylinder number = ***
    xxxxxxxxxxxxxxxxxxxxxx Warning ! ! ! xxxxxxxxxxxxxxxxxxxxx
Do you want to continue ? (Y/N)
```

Press (Y) key.

(Normal Message) : Test done ! ! Press any key when ready._

When an error message is displayed, refer to [5.2 Error Message].

For 6. HDD - SEQUENTIAL SEEK TEST.

Press (6) and (Enter) keys.

```
1st HDD - SEQUENTIAL SEEK TEST
Cylinder = xxx
```

The numbers indicated by xxx will vary depending on the type of HDD.

(Normal Message) : Test done ! ! Press any key when ready._

When an error message is displayed, refer to [5.2 Error Message].

For 7. HDD - RANDOM SEEK TEST.

Press (7) and (Enter) keys.

```
1st HDD - RANDOM SEEK TEST
Cylinder = xxx
```

The numbers indicated by xxx will vary depending on the type of HDD.

(Normal Message) : Test done ! ! Press any key when ready._

When an error message is displayed, refer to [5.2 Error Message].

8) 1FLOPPY DISK DRIVE(S) TEST

Press (11) and (Enter) keys.

```
1st FLOPPY DISK DRIVE(S)
    1. TEST ALL DEVICES      ( ■ DEVICES)
    2. TEST AUTOMATICALLY  ( ■ DEVICES)
    3. EXIT
■   4. FLOPPY DISK CONTROLLER TEST
■   5. 1st FLOPPY DISK  DRIVE TEST
  SELECT : _
```

For 4. FLOPPY DISK CONTROLLER TEST. **(Without CF-72 model)**

Press (4) and (Enter) keys.

```
FLOPPY DISK CONTROLLER TEST
```

(Normal Message) : Test done ! ! Press any key when ready._

When an error message is displayed, refer to [5.2 Error Message].

For 5. 1st FLOPPY DISK DRIVE TEST.

Press (5) and (Enter) keys.

```
1st FLOPPY DISK DRIVE TEST
      1. TEST ALL DEVICES        ( ■ DEVICES)
      2. TEST AUTOMATICALLY      ( ■ DEVICES)
      3. EXIT
   ■  4. DRIVE TEST
      5. 720KB - MEDIA TEST
      6. 1.44MB - MEDIA TEST
   SELECT MENU :  _
```

For 4. DRIVE TEST.

Press (4) and (Enter) keys.

```
1st FLOPPY DISK DRIVE (1.44MFD) TEST
```

(Normal Message) : Test done ! ! Press any key when ready._

When an error message is displayed, refer to [5.2 Error Message].

For 5. 720KB - MEDIA TEST.

Press (5) and (Enter) keys.

NOTE) At this time insert a formattable floppy disk into the FDD.
(All data on the floppy disk will be erased.)

```
720KB - MEDIA TEST

      xxxxxxxxxxxxxxxxxxxxxx Warning ! ! ! xxxxxxxxxxxxxxxxxxxx
            CONTENTS OF DISK WILL BE DESTROYED
      xxxxxxxxxxxxxxxxxxxxxx Warning ! ! ! xxxxxxxxxxxxxxxxxxxx

      Insert scratch 2DD disk into 1st drive <------ Press a key to begin formatting.
      Hit any key when ready.

      Formatting.......

      Read/Write test
Sequential seek test
Random  seek test
```

(Normal Message): Test done ! ! Press any key when ready._

When an error message is displayed, refer to [5.2 Error Messages].

*Use the same procedure for 6, (1.44MB-MEDIA TEST).

9) 1 PARALLEL PORT(S) TEST.

Press (12) and (Enter) keys.

```
1st Parallel port test
   1. TEST ALL DEVICES    ( ■ DEVICES)
   2. TEST AUTOMATICALLY  ( ■ DEVICES)
   3. EXIT
   4. PRINT OUT TEST
   5. EXTERNAL LOOPBACK TEST
SELECT : _
```

For 4. PRINT OUT TEST.

Press (4) and (Enter) keys.

```
1st Parallel port test (I/O address  xxxH)
Connect printer
Hit any key when ready._
```

(Normal Message): Sample characters will be printed to the printer.

```
1st Parallel port test (I/O address 378H)
 !"#$%&'()*+,-./0123456789:;<=>?@ABCDEFGHIJKLMNOPQRSTUVWXYZ[\]^_`abcdefghijklmno
!"#$%&'()*+,-./0123456789:;<=>?@ABCDEFGHIJKLMNOPQRSTUVWXYZ[\]^_`abcdefghijklmnop
"#$%&'()*+,-./0123456789:;<=>?@ABCDEFGHIJKLMNOPQRSTUVWXYZ[\]^_`abcdefghijklmnopq
#$%&'()*+,-./0123456789:;<=>?@ABCDEFGHIJKLMNOPQRSTUVWXYZ[\]^_`abcdefghijklmnopqr
$%&'()*+,-./0123456789:;<=>?@ABCDEFGHIJKLMNOPQRSTUVWXYZ[\]^_`abcdefghijklmnopqrs
%&'()*+,-./0123456789:;<=>?@ABCDEFGHIJKLMNOPQRSTUVWXYZ[\]^_`abcdefghijklmnopqrst
&'()*+,-./0123456789:;<=>?@ABCDEFGHIJKLMNOPQRSTUVWXYZ[\]^_`abcdefghijklmnopqrstu
'()*+,-./0123456789:;<=>?@ABCDEFGHIJKLMNOPQRSTUVWXYZ[\]^_`abcdefghijklmnopqrstuv
()*+,-./0123456789:;<=>?@ABCDEFGHIJKLMNOPQRSTUVWXYZ[\]^_`abcdefghijklmnopqrstuvw
)*+,-./0123456789:;<=>?@ABCDEFGHIJKLMNOPQRSTUVWXYZ[\]^_`abcdefghijklmnopqrstuvwx
```

When an error message is displayed, refer to [5.2 Error Message].

For 5. EXTERNAL LOOPBACK TEST.

Press (5) and (Enter) keys.

```
1st Parallel port test (I/O address xxxH)

Connect loopback plug. <------ Connect the loopback plug
                               to the parallel port.
Hit any key when ready._
```

(Normal Message): Test done ! ! Press any key when ready._

When an error message is displayed, refer to [5.2 Error Message].

Loopback Plug Wiring Information

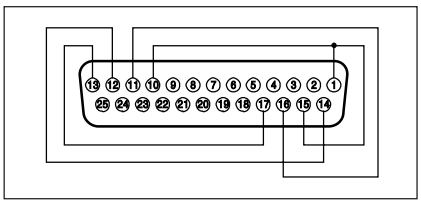

1-10-15 Pin
11-16 Pin
12-14 Pin
13-17 Pin

10) 1 SERIAL PORT(S)

Press (13) and (Enter) keys.

```
1st SERIAL PORT TEST

    1. TEST ALL DEVICES        ( ■ DEVICES)
    2. TEST AUTOMATICALLY      ( ■ DEVICES)
    3. EXIT
  ■ 4. RS232C CONTROLLER REGISTER R/W TEST
  ■ 5. INTERNAL LOOPBACK TEST
    6. EXTERNAL LOOPBACK TEST

SELECT MENU : _
```

For 4. RS232C CONTROLLER REGISTER R/W TEST.

Press (4) and (Enter) keys.

```
1st serial port test (I/O address xxxH)
```

(Normal Message): Test done ! ! Press any key when ready._

When an error message is displayed, refer to [5.2 Error Message].

For 5. INTERNAL LOOPBACK TEST.

Press (5) and (Enter) keys.

```
1st serial port test (I/O address xxxH)
```

(Normal Message): Test done ! ! Press any key when ready._

When an error message is displayed, refer to [5.2 Error Message].

For 6. EXTERNAL LOOPBACK TEST.

Press (6) and (Enter) keys.

```
1st serial port test (I/O address xxxH)

Connect loopback plug. <------ Connect the loopback plug
                               to the serial port.
Hit any key when ready._
```

(Normal Message): Test done ! ! Hit any key when ready._

When an error message is displayed, refer to [5.2 Error Message].

Loopback Plug Wiring Information

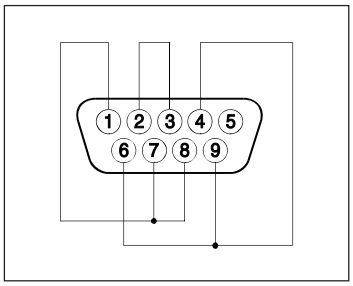

11) PCCARD CONTROLLER TEST.

Press (14) and (Enter) keys.

```
PCCARD CONTROLLER
```

(Normal Message): Test done ! ! Press any key when ready._

when an error message is displayed, refer to [5.2 Error Message].

12) INFRARED COMMUNICATION PORT TEST.

Press (15) and (Enter) keys.

```
    1. TEST ALL DEVICES        ( ■ DEVICES)
    2. TEST AUTOMATICALLY      ( ■ DEVICES)
    3. EXIT
  ■ 4. CONTROLLER REGISTER R/W TEST
  ■ 5. INTERNAL LOOPBACK TEST
SELECT MENU : _
```

For 4. CONTROLLER REGISTER R/W TEST.

Press (4) and (Enter) keys.

```
CONTROLLER REGISTER R/W TEST
Infrared port (I/O address xxxxH)
```

(Normal Message): Test done ! ! Press any key when ready._

When an error message is displayed, refer to [5.2 Error Message].

For 5. INTERNAL LOOPBACK TEST.

Press (5) and (Enter) keys.

```
INTERNAL LOOPBACK TEST
Infrared port (I/O address xxxxH)
```

(Normal Message): Test done ! ! Press any key when ready._

When an error message is displayed, refer to [5.2 Error Message].

13)CD-ROM DRIVE TEST.

Press (16) and (Enter) keys. Insert the Firstaid CD in to the CD-ROM drive.

```
Place the enclosed Firstaid CD on the CD-ROM drive.
Hit any key when ready_
```

(Normal Message): Test done ! ! Press any key when ready._

When an error message is displayed, refer to [5.2 Error Message].

5.2 Error Message

Test Item	Error Message		Source of Problem	Component
Main PCB Test				
CMOS RAM shutdown byte r/w test	CRAM	Shutdown byte test failed. (F10) Write data: xxxx Read data: xxxx	Main PCB	IC3
Programmable interrupt timer test	PIT PIT	Timer #2 counter r/w failed. (F10) Write data: xx Read: xx Timer count failed. (F10) High count value expected: 00 current data: xx	Main PCB	IC3
Page register r/w test	PREG PREG	Page register r/w test failed. (byte) (F10) Write data = xx Read data = xx Page register r/w test failed. (word) (F10) Write data = xx Read data = xx	Main PCB	IC3
DMA controller register r/w test	DMAC	DMA controller register r/w test failed. (F10) I/O address: xxxx Write data: xxxx Read data: xxxx	Main PCB	IC3
Keyboard controller test	KBCTRL KBCTRL KBCTRL KBCTRL KBCTRL KBCTRL KBCTRL	Keyboard controller input buffer full. (F10) Keyboard line always low. (clock) (F10) Keyboard line always high. (clock) (F10) Keyboard line always low. (data) (F10) Keyboard line always high. (data) (F10) Keyboard controller output buffer empty. (F10) Keyboard controller self test failed. (F10) Return code: xx	Main PCB	IC31
Programmable interrupt controller test	PIC PIC PIC PIC PIC PIC	PIC #0 interrupt mask register failed. (F10) Write data: xx Read data: xx PIC #1 interrupt mask register failed. (F10) Write data: xx Read data: xx PIC #0 handling error (F10) ISR status: xx PIC #1 handling error (F10) ISR status: xx PIC #0 no interrupt occurred. (F10) PIC #1 no interrupt occurred. (F10)	Main PCB	IC3
Real-time clock test	RTC RTC RTC	Real-time clock UIP bit always ON. (F10) Real-time clock UIP bit always OFF. (F10) Real-time clock data out of range. (F10) (Second data: ss) (Minute data: mm) (Hour data: hh) (Data data: dd) (Month data: mm) (Year data: yyyy)	Main PCB	IC3
RAM Test				
DRAM r/w test	DRAM	DRAM R/W test failed. (F11) Address: xxxxxxxxH Write data: xxH Read data: xxH	Main PCB	IC10-17
DRAM refresh test	DRAM	DRAM Refresh test failed. (F11) Address: xxxxxxxxH Write data: xxH Read data: xxH	Main PCB	IC10-17
DRAM address line test	DRAM	DRAM Address Line test failed. (F11) The data written into address: xxxxxxxxH can be read from address: yyyyyyyyH	Main PCB	IC10-17
Protect test		[xx] Protected mode error. (F11)	Main PCB	IC1 IC2

Test Item	Error Message		Source of Problem	Component
Keyboard Test				
Keyboard reset test	KEY	Keyboard failed. (F40)	Main PCB	IC3 IC31
Keyboard data test	KEY	Keyboard has been hit or broken. (F10) SCAN code : xx	Main PCB	IC31
Floppy Disk Drive Test				
Floppy disk controller test		FDC failed. (F10) Master status: n1n2 Floppy Disk Controller (FDC) master status has failed. Data bus or FDC chip has failed. (n1n2 is FDC master status listed on page 5-27.)	Main PCB	IC5
Floppy disk controller test		Init. failed. (F10) BIOS status : xx Floppy Disk Controller (FDC) initialization has failed. Data bus or FDC chips have failed. (xx is BIOS disk error status listed on page 5-27.)	Main PCB	IC5
Floppy disk drive test		Seek failed (max. track) (F30) Seek has failed. Floppy Disk Controller (FDC) cable or FDC chip has failed.	FDD	———
Floppy disk drive test		Seek failed (0 track) (F30) Seek has failed. Floppy Disk Controller (FDC) cable or FDC chip has failed.	FDD	———
Floppy disk controller test		Cannot change spindle speed of FDD motor (F10)	Main PCB	IC5
Hard Disk Drive Test				
HDC reset test		HDC reset failed. (F31)	HDD	———
HDC diagnostic test		HDC internal diagnostic failed. (F31)	HDD	———
HDD set parameter test		HDD set drive parameter failed. (F31) BIOS status: xx HDC status: xx HDC error status: xx (xx: Refer to page 5-27.)	HDD	———
HDD drive ready test		HDD drive not ready. (F31) BIOS status: xx HDC status: xx HDC error status: xx (xx: Refer to page 5-27.)	HDD	———
HDD recalibrate test		HDD recalibrate failed. (F31) BIOS status: xx HDC status: xx HDC error status: xx (xx: Refer to page 5-27.)	HDD	———
HDD seek test		HDD seek failed. (F31) BIOS status: xx HDC status: xx HDC error status: xx (xx: Refer to page 5-27.)	HDD	———
HDD seek time test		HDD seek does not complete within some period. (F31) BIOS status: xx HDC status: xx HDC error status: xx (xx: Refer to page 5-27.)	HDD	———

Test Item	Error Message		Source of Problem	Component
Serial Port Test				
Register test	RS232	Serial port failed. (F71) Interrupt ID Write: xx Read: xx	Main PCB	IC5
	RS232	Serial port failed. (F71) Divisor Write: xx Read: xx		
Internal loopback test	RS232	Serial port data loopback failed. (F71) Line & modem status: n1n2,n3n4 (Refer to the tables of loopback line status and loopback modem status on page 5-27.)	Main PCB	IC5
	RS232	Serial port data loopback failed. (F71) Xmit: xx Recv: xx		
	RS232	Serial port signal loopback failed. (F71) Modem status: n3n4 Expected: n3'n4' (n3n4: result by test. Refer to the table of loopback modem status on page 5-27. n3'n4': expected status.)		
External loopback test	RS232	Serial port signal real loopback test failed. (F71) Modem status: n3n4 Expected: n3'n4' (n3n4: result by test. Refer to the table of loopback modem status on page 5-27. n3'n4': expected status.)	Main PCB	IC5 IC30
	RS232	Serial port data real loopback test failed. (F71) Line status : n1n2 (n1n2: Refer to the table of loopback line status on page 5-27.)		
	RS232	Serial port data real loopback test failed. (F71) Xmit: xx Recv: xx		
	RS232	Data real loopback transmit failed. (F71) Line status: n1n2 (n1n2: Refer to the table of loopback line status on page 5-27.)		
	RS232	Data real loopback interrupt request failed. (F71) Line status: n1n2 (n1n2: Refer to the table of loopback line status on page 5-27.)		
	RS232	Data real loopback receive failed. (F71) Line status: n1n2 (n1n2: Refer to the table of loopback line status on page 5-27.)		
Parallel Port Test				
Printer Out Test	PPA	Time -out error occurred with parallel printer. (F72) BIOS status: n1n2 Character: xx	Main PCB	IC5
	PPA	I/O error occurred with parallel printer. (F72) BIOS status: n1n2 Character: xx (n1n2 is a printer BIOS error status listed on page 5-28.)		
	PPA	Paper end occurred with parallel printer. (F72) BIOS status: n1n2 Character: xx (xx is the character sent to the printer.)	Paper end	———
External Loopback test	PPA	Parallel port interrupt request failed. (F72)	Main PCB	IC5
	PPA	Parallel port signal real loopback test failed. (F72) Status: xx Expected: xx		

Test Item	Error Message	Source of Problem	Component
Infrared Communication Port Test			
Controller register r/w test	Infrared port failed. (F80)	Main PCB	IC5
PC CARD Controller Test			
	PC CARD Controller is invalid. (F10) Controller status : xxH	Main PCB	IC28
Sound Test			
Sound register test	SOUND REGISTER R/W ERROR! ! (F81) SB DSP RESET ERROR (F81) MPU RESET ERROR (F81)	Main PCB	IC33
Battery Test			
	Battery Overcharged (F10) Battery Overdischarged (F10) Battery Cell balance error (F10) Battery Switching error (F10) Battery Temperature is out of range (F10) Battery Exceed maximum charging amount (F10) Battery Exceed maximum charging time (F10) Battery Serial communication error (F10) Battery Charging current does not decrease (F10) Battery No response from battery (F10) Battery Charging current error (F10) Battery Abnormal high voltage (F10) Battery Abnormal temperature (F10) Battery Low voltage after 60 minutes charged (F10) Battery No battery but voltage is deleted (F10) Battery Exceed maximum charging amount (F10) Battery Abnomal charging current (F10) Battery Abnomal CPU temperature (F10)	Main PCB	IC49
CD-ROM Test	No CD-ROM drive found. (F32) Invalid CD-ROM or no CD-ROM. (F32)	Main PCB	IC3

• FDC master status

Nibble	Bit	Meaning
n1	D3	1: FDC data register is ready to receive and transmit data
	D2	1: Transmit data from FDC to processor
	D1	1: Transmit in non-DMA mode
	D0	1: FDC is busy
n2	D3	
	D2	
	D1	1: Seek in drive B
	D0	1: Seek in drive A

• BIOS disk error status

Status	Meaning
80	Time out
40	Seek out
20	FDC failed
10	CRC error
0C	Bad media type
09	DMA boundary
08	DMA overrun
06	Diskette removed
04	Sector not found
03	Write protected
02	No address mark
01	Invalid command

• BIOS error status

Status	Meaning
FF	Sense status failed
E0	Error status register
CC	Write fault
BB	Undefined error
AA	Drive not ready
80	Time out
40	Seek error
20	Controller failed
11	ECC corrected data error
10	Bad CRC or ECC
0F	DMA arbitration level out of range
0E	Control data address mark detected
0D	Invalid number of sectors on format
0B	Bad cylinder
0A	Bad sector
09	DMA boundary
08	DMA overrun
07	Drive parameter error
05	Reset failed
04	Sector not found
02	No address mark
01	Invalid command

• HDC error status

Nibble	Bit	Meaning
n3	D3	1: Back block
	D2	1: Non-correctable ECC error
	D1	1:
	D0	1: Selector not found
n4	D3	1:
	D2	1: HD not ready
	D1	1: No track 00 signal
	D0	1: No address mark

• HDC status

Nibble	Bit	Meaning
n1	D3	1: HDC is busy
	D2	1: HDC is ready
	D1	1: Write fault signal from HD
	D0	1: Seek is completed
n2	D3	1: HDC requests to transmit data
	D2	1: ECC corrected data
	D1	1: Index pulse signal
	D0	1: Error found in executed instructions

• Loopback line status

Nibble	Bit	Meaning
n1	D3	1: Timing out
	D2	1: Transmit shift register (is) empty
	D1	1: Transmit-holding register (is) empty
	D0	1: Break detect
n2	D3	1: Framing error
	D2	1: Parity error
	D1	1: Overrun error
	D0	1: Data ready

• Loopback modem status

Nibble	Bit	Meaning
n3	D3	1: Carrier detect (CD)
	D2	1: Ring indicator (RING)
	D1	1: Data set ready (DSR)
	D0	1: Clear to send (CTS)
n4	D3	
	D2	
	D1	
	D0	

• Printer BIOS error status

Nibble	Bit	Meaning
n1	D3 D2 D1 D0	0: Busy 1: Acknowledge 1: Paper end 1: Printer is selected
n2	D3 D0	1: I/O error 1: Time-out

- When an error occurs during format, verify, write and read tests for FDD, an error message is displayed in the following format of the command and error names:

(Format of Error Message)

[Command Name] failed: [Error Name] Cylinder = xx Head = xx Sector = xx

Command Name: Read
Write
Verify
Format
Read long
Write long
Command

Error Name: HDC not found (FFH)
Bad err register (E0H)
Write fault (CCH)
Undefined error (BBH)
Drive not ready (AAH)
Time-out (80H)
Seek error (40H)
FDC or HDC error (20H)
Data corrected (11H)
CRC or ECC error (10H)
Bad track (0BH)
Bad sector mark (0AH)
64 K boundary (09H)
DMA overrun (08H)
Parameter error (07H)
Reset error (05H)
No record (04H)
Write protected (03H)
No address mark (02H)
Invalid command (01H)

When there is a difference between write data and read data, the following error message is displayed:

Compare error Cylinder = xx Head = xx Sector = xx

- When an error occurs during format, write long, read long, write and read tests for HDD, an error message is displayed in the following format of command and error names:

(Format of Error Message)

[Command Name] failed: [Error Name] Cylinder = xx Head = xx Sector = xx

Command Name: Please refer to the FDD section above.
Error Name: Please refer to the FDD section above.

6. Disassembly/Reassembly

Note: Power off the computer. Do not shut down to the Suspend or hibernation mode.

Do not add peripherals while the computer is in the Suspend or hibernation mode; abnormal operation may result.

6.1 Removing the Battery Pack.

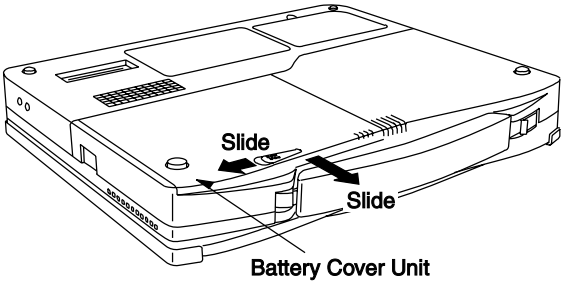

Figure 1

1. Slide the latch, and then without releasing it, slide and remove the battery cover unit.

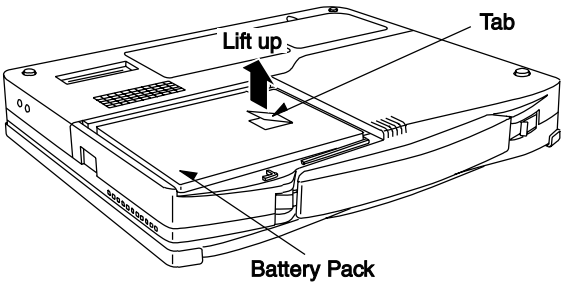

Figure 2

2. Lift up the tab and remove the battery pack.

6.2 Removing the HDD Unit.

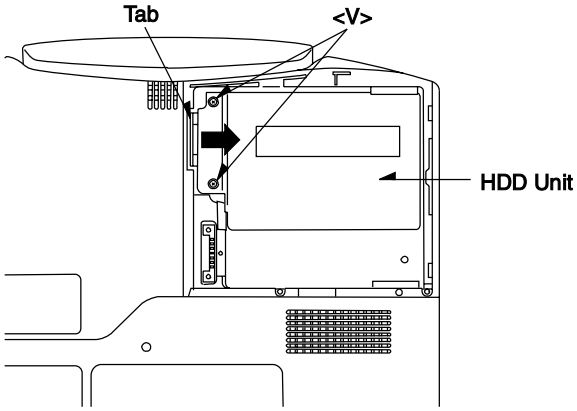

Figure 3

1. Remove the two screws <V>.
2. Put down the tab, and lift up the HDD unit.
   Screw <V>: DFHE5061ZA

6.3 Removing the Palmrest Unit, the PAD PCB and the Touch Pad.

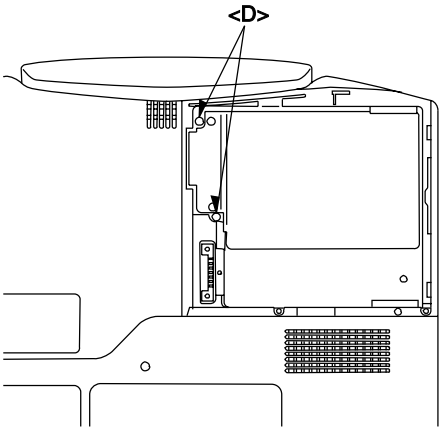

Figure 4

1. Remove the two screws <D>.
   Screw <D>: XTB2+16GFN

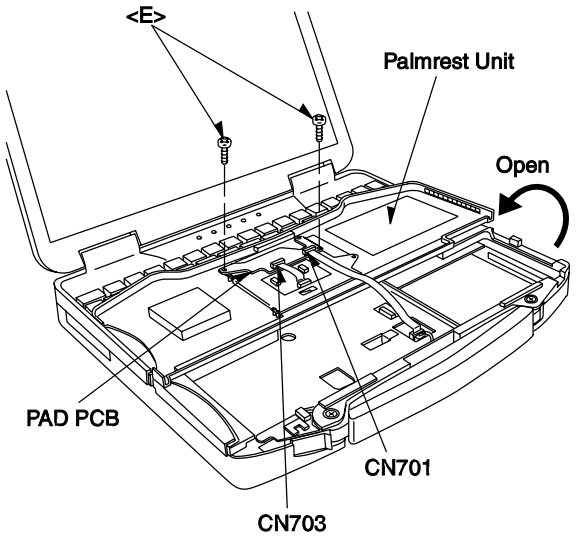

Figure 5

2. Turn open the palmrest unit.
3. Disconnect the two connectors CN701 and CN703.
4. Remove the two screws <E>.
5. Remove the PAD PCB.
   Screw <E>: XTB2+5GFN

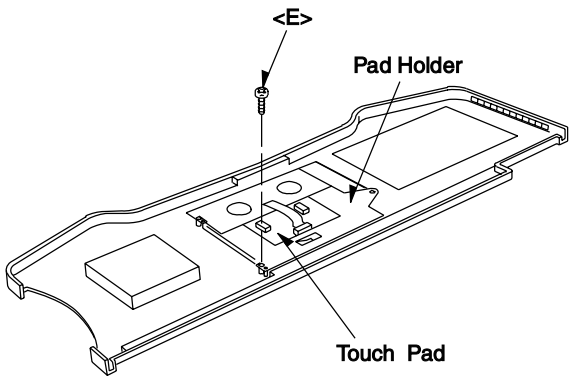

Figure 6

6. Remove the screw <E>, and remove the pad holder.
7. Peel the Touch pad.
   Screw <E>: XTB2+5GFN

6.4 Removing the RAM Card.

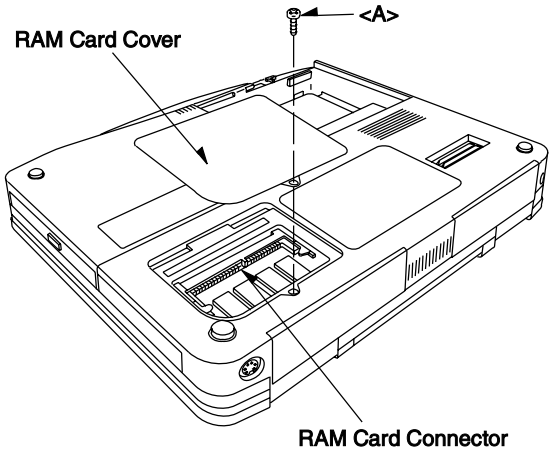

Figure 7

1. Remove the screw <A>, and remove the RAM card cover.
   Screw <A>: XYN2+J12FZ

6.5 Removing the Keyboard.

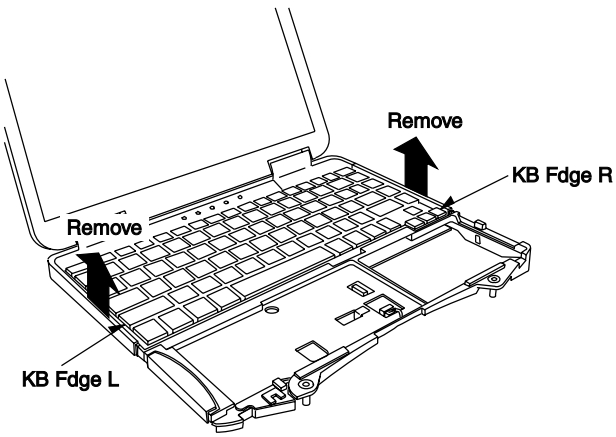

Figure 8

1. Remove the KB edge L and the KB edge R.

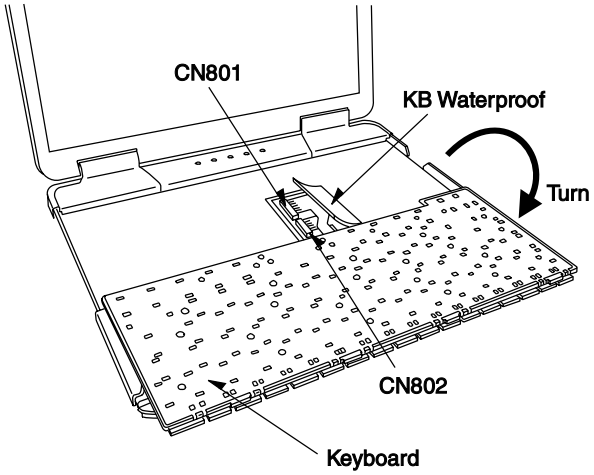

Figure 9

2. Turn the keyboard.
3. Open the KB waterproof.
4. Disconnect the two connectors CN801 and CN802.
5. Remove the keyboard

6.6 Removing the LCD Section and the Center Cover.

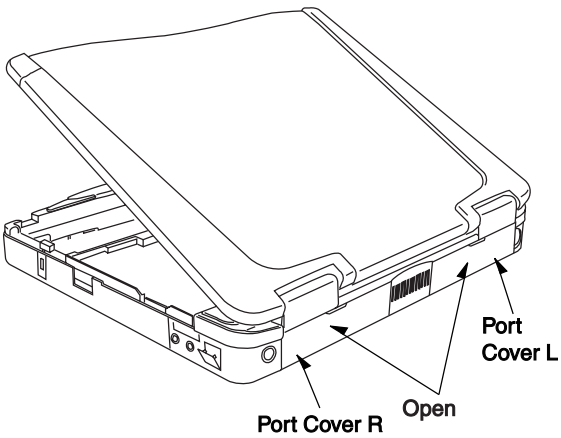

Figure 10

1. Open the port cover R and the port cover L.

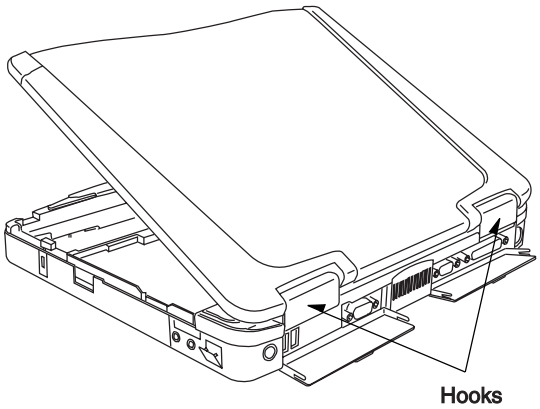

Figure 11

2. Release the hooks of the hinge cover L and the hinge cover R.

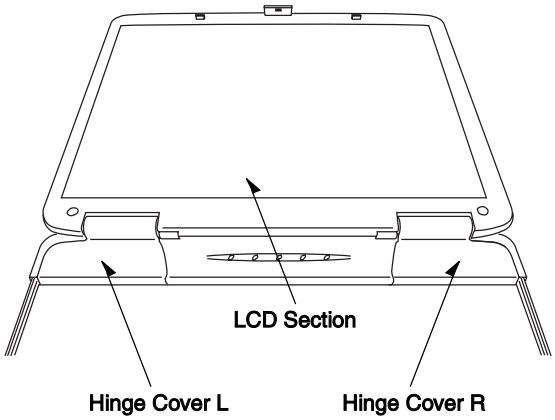

Figure 12

3. Level the LCD Section, and remove the hinge cover R and the hinge cover L.

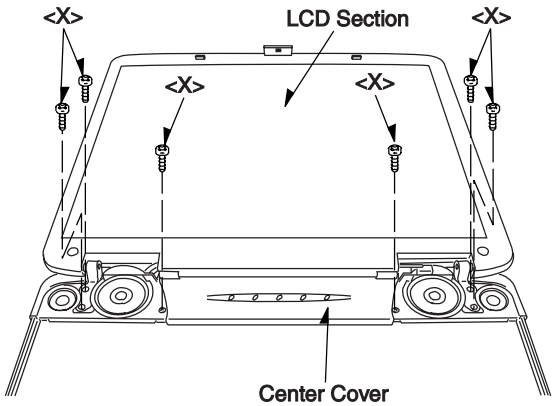

Figure 13

4. Remove the three screws <C>, and remove the LCD unit and the center cover.
   Screw<X> : XYN2+7FN

6.7 Removing the LCD Section and the LED PCB.

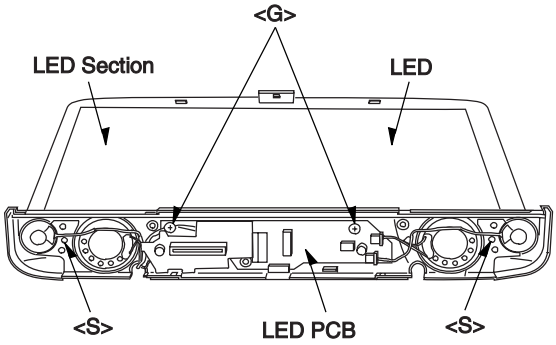

Figure 14

1. Remove the two screws <S>, and remove the LCD unit.
2. Remove the two screws <G>, and remove the LED PCB.
   Screw <S>: DFHE5025XA
   Screw <G>: DXHM0021ZA

6.8 Removing the PCB Case Unit.

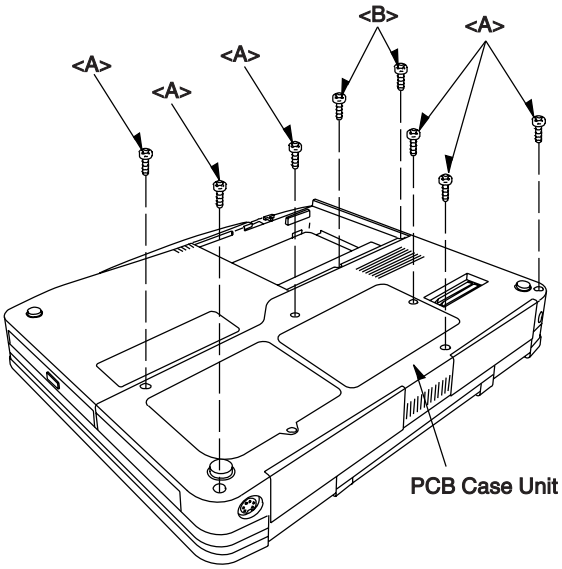

Figure 15

1. Remove the six screws <A>, and two screws <B>.
2. Remove the PCB case.
   Screw <A>: XYN2+J12FZ
   Screw <B>: XYN2+J16FN

6.9 Removing the Bottom Case Unit and the Handle Unit.

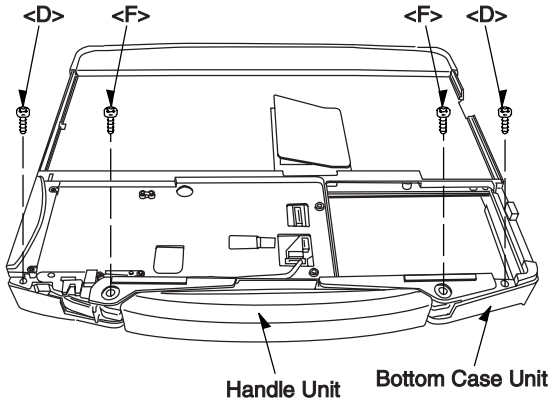

Figure 16

1. Remove the two screws <D>, and two screws <F>.
2. Remove the bottom case unit, and remove the handle unit.
   Screw <D>: XTB2+16GFN
   Screw <F> : XTB26+20GFN

6.10 Removing the CD-ROM Drive.

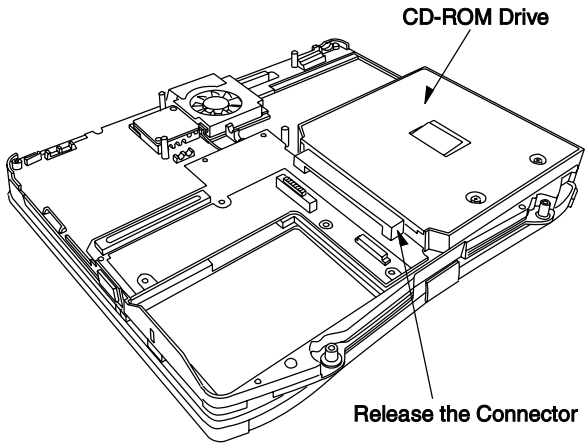

Figure 17

1. Release the connector to remove the CD-ROM drive.

6.11 Removing the Main PCB.

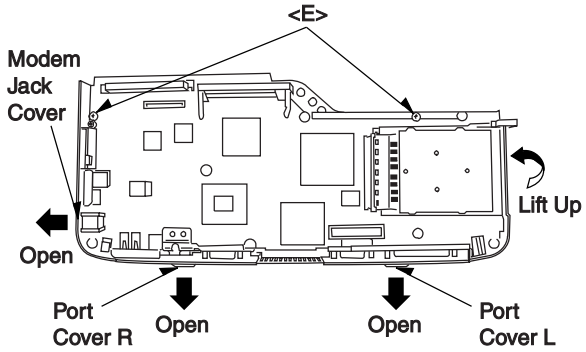

Figure 18

1. Remove the two screws <E>.
2. Open the modem jack cover , port cover R and the port cover L.
   Screw <E>: XTB2+5GFN

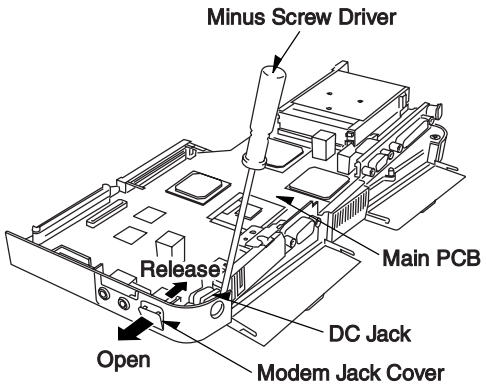

Figure 19

3. Open the DC jack cover, and release the DC jack.

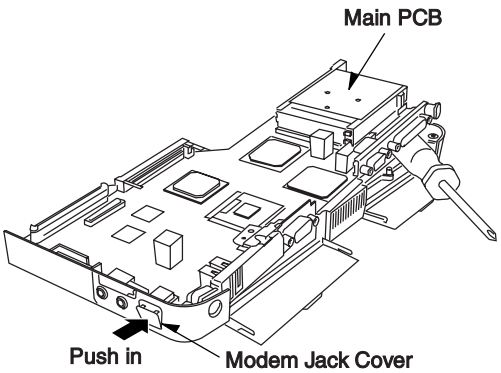

Figure 20

4. Push in the modem jack cover, and remove the main PCB.

6.12 Removing the Fan and the Fan Heat Angle.

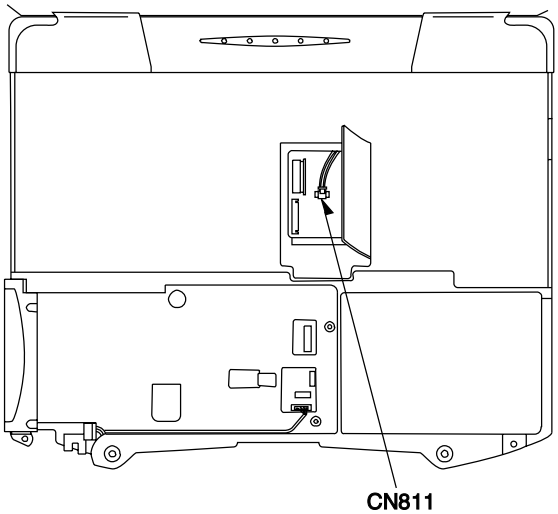

Figure 21

1. Disconnect the connector CN811.

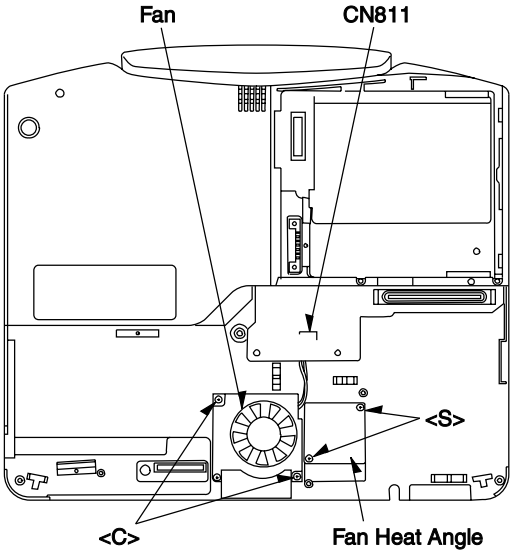

Figure 22

2. Remove the two screws <C>, and remove the fan.
3. Remove the two screws <S>, and remove the fan heat angle.
   Screw <C>: XYN2+J6FN
   Screw <S>: DFHE5025XA

6.13 Removing the Sub PCB.

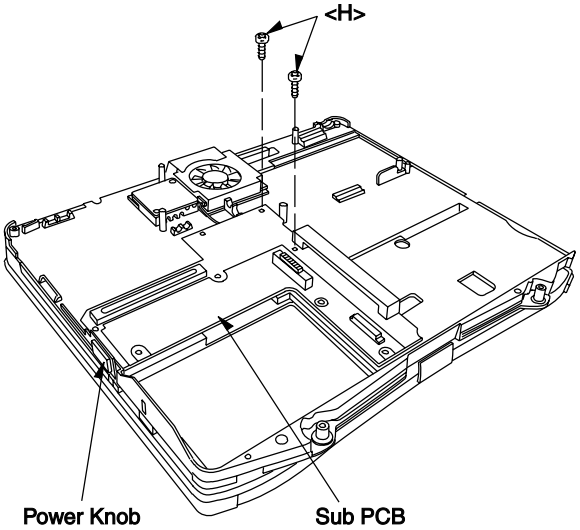

Figure 23

1. Remove the two screws <H>, and remove the power knob and the sub PCB.
   Screw <H>: DFHE5020YB

6.14 Removing the LID PCB.

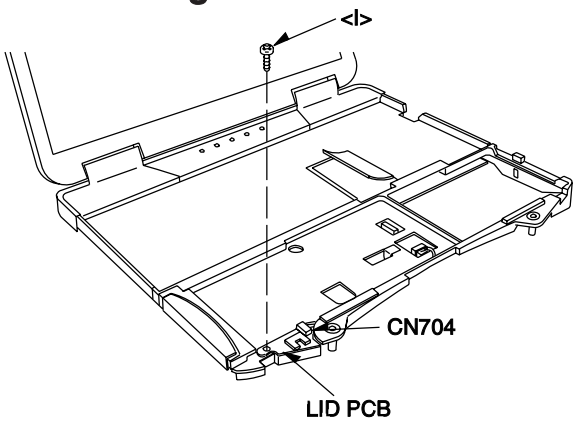

Figure 24

1. Remove the screw <I>, and disconnect the connector CN704.
2. Remove the LID PCB.
   Screw <I>: DFHE5025XA

6.15 Removing the Bus Shutter Unit and the Card Shutter Unit.

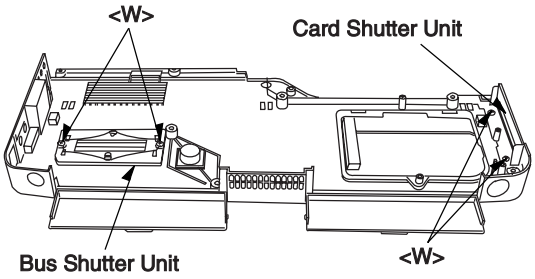

Figure 25

1. Remove the four screws <W>.
2. Remove the bus shutter unit and the card shutter unit.
   Screw <W>: XQN2+J4FN

6.16 Removing the PCMCIA CN (PC Card Slot) and RTC Battery.

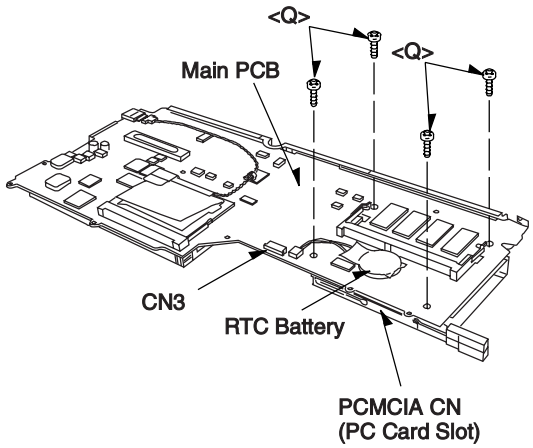

Figure 26

1. Remove the four screws <Q>.
2. Remove the PCMCIA CN (PC card slot) from the main PCB.
3. Disconnect the connector CN3, and peel the RTC battery.
   Screw <Q>: XYN2+J4FN

6.17 Removing the LCD Unit and the Inverter PCB.

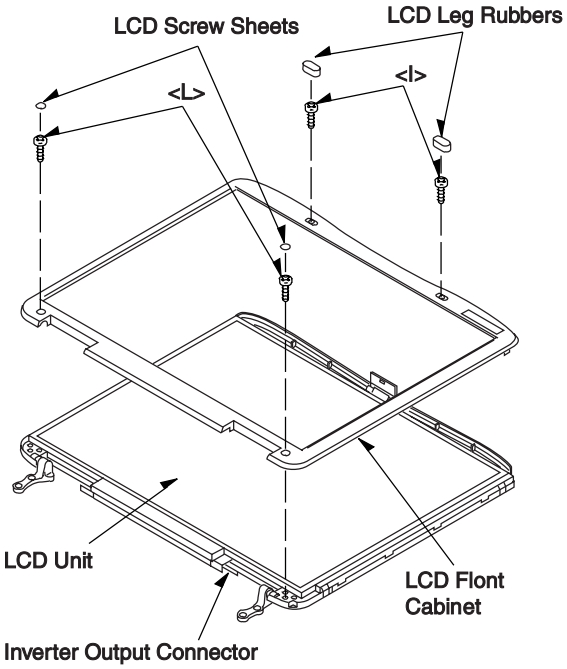

Figure 27

1. Remove the two LCD leg rubbers and the two screws <I>.
2. Remove the two LCD screw sheets and the two screws <L>.
3. Remove the LCD front cabinet.
4. Disconnect the inverter output connector.
5. Lift up the LCD unit.
   Screw <I>: DFHE5025XA
   Screw <L>: DFHE5086ZA

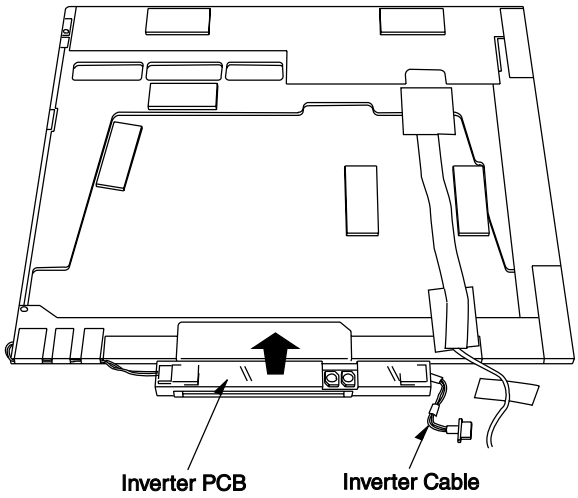

Figure 28

6. Remove the inverter cable.
7. Remove the inverter PCB.

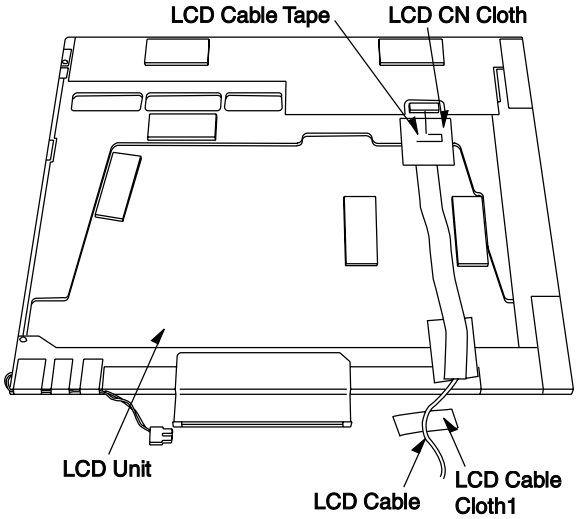

Figure 29

8. Peel the LCD cable cloth1, LCD cable cloth and the LCD CN tape.
9. Remove the LCD cable to remove the LCD unit.

6.18 Removing the LCD Lock and the LCD Lock Spring.

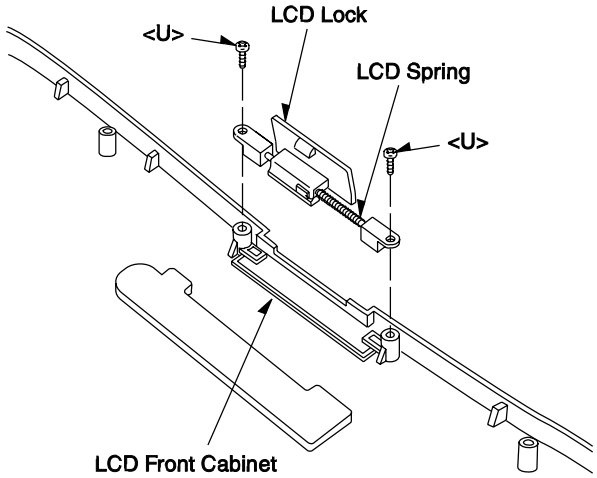

Figure 30

1. Remove the two screws <U>.
2. Remove the LCD lock and the LCD lock spring.
   Screw <U>: DFHE5119ZA

7. Wiring Connection Diagram

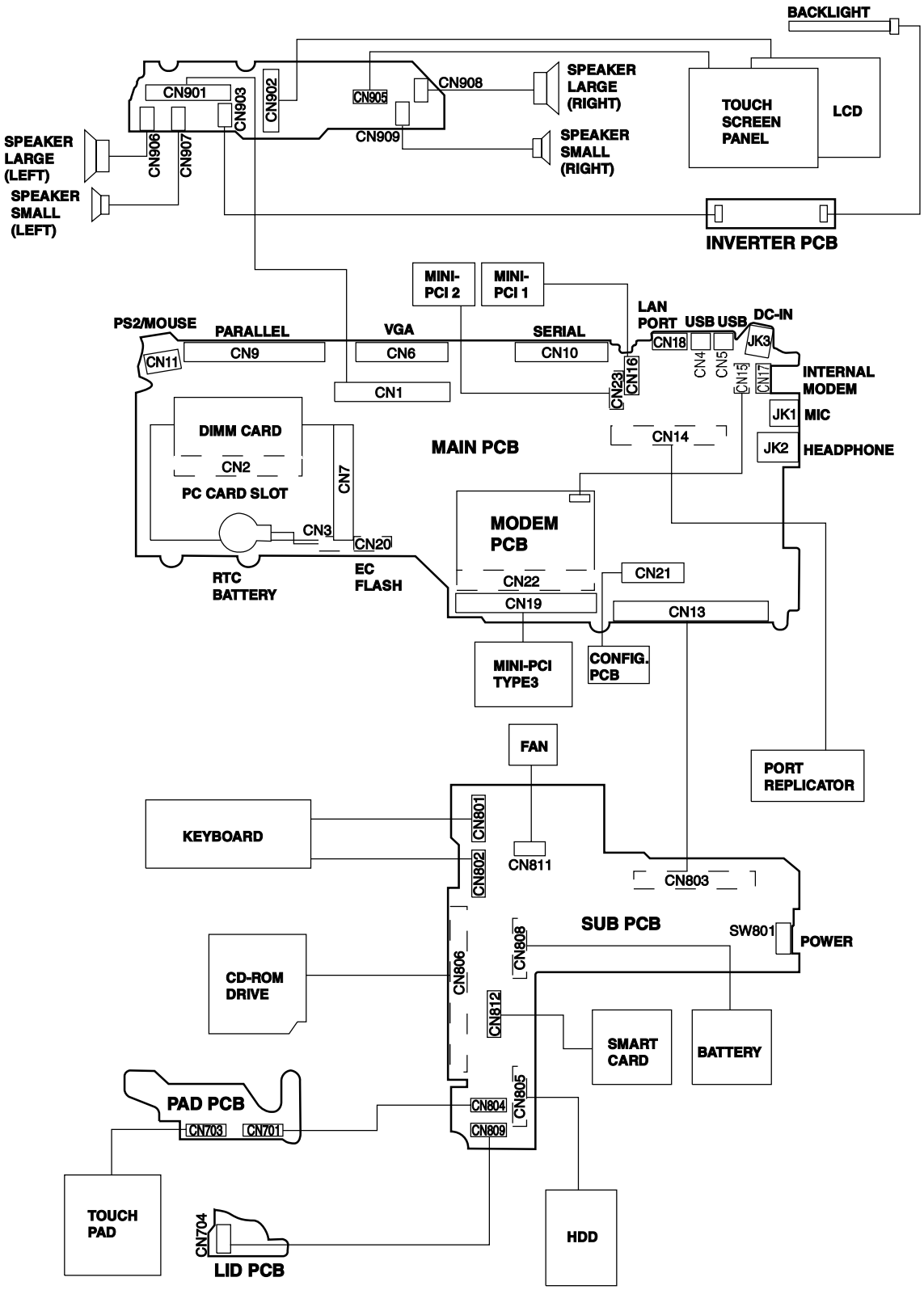

8. Exploded View

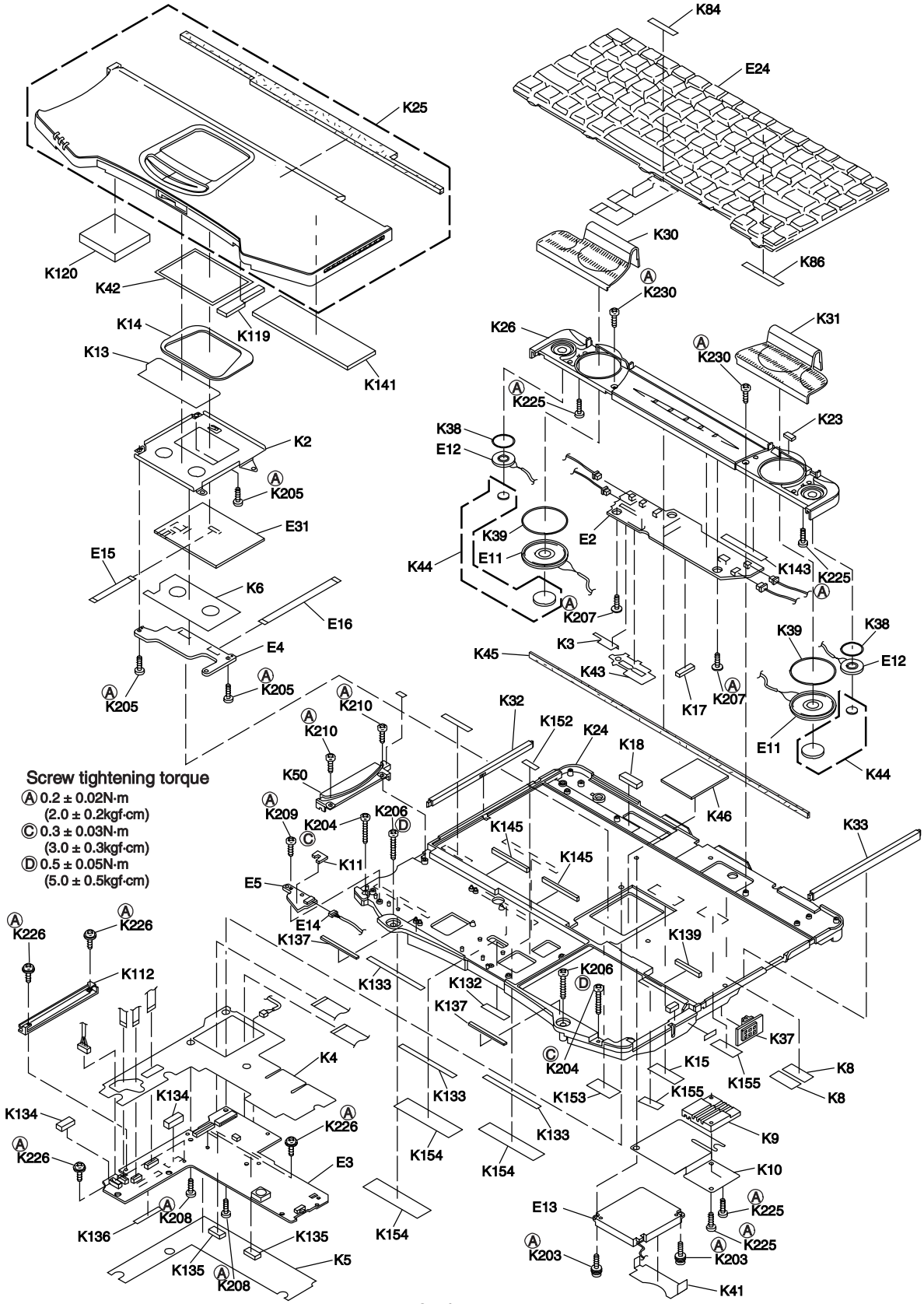

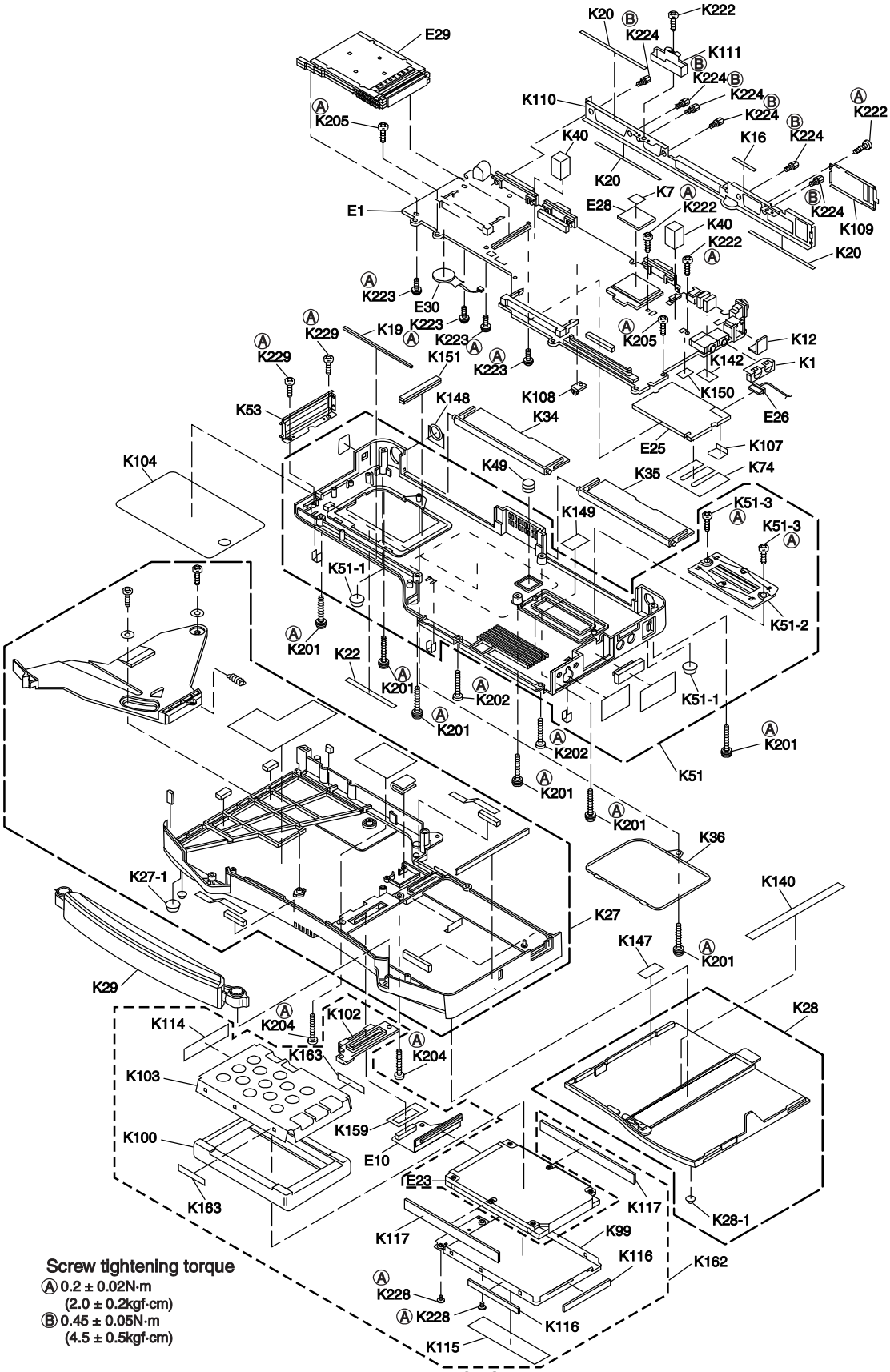

Screw tightening torque

Ⓐ 0.2 ± 0.02N·m
(2.0 ± 0.2kgf·cm)

Ⓑ 0.45 ± 0.05N·m
(4.5 ± 0.5kgf·cm)

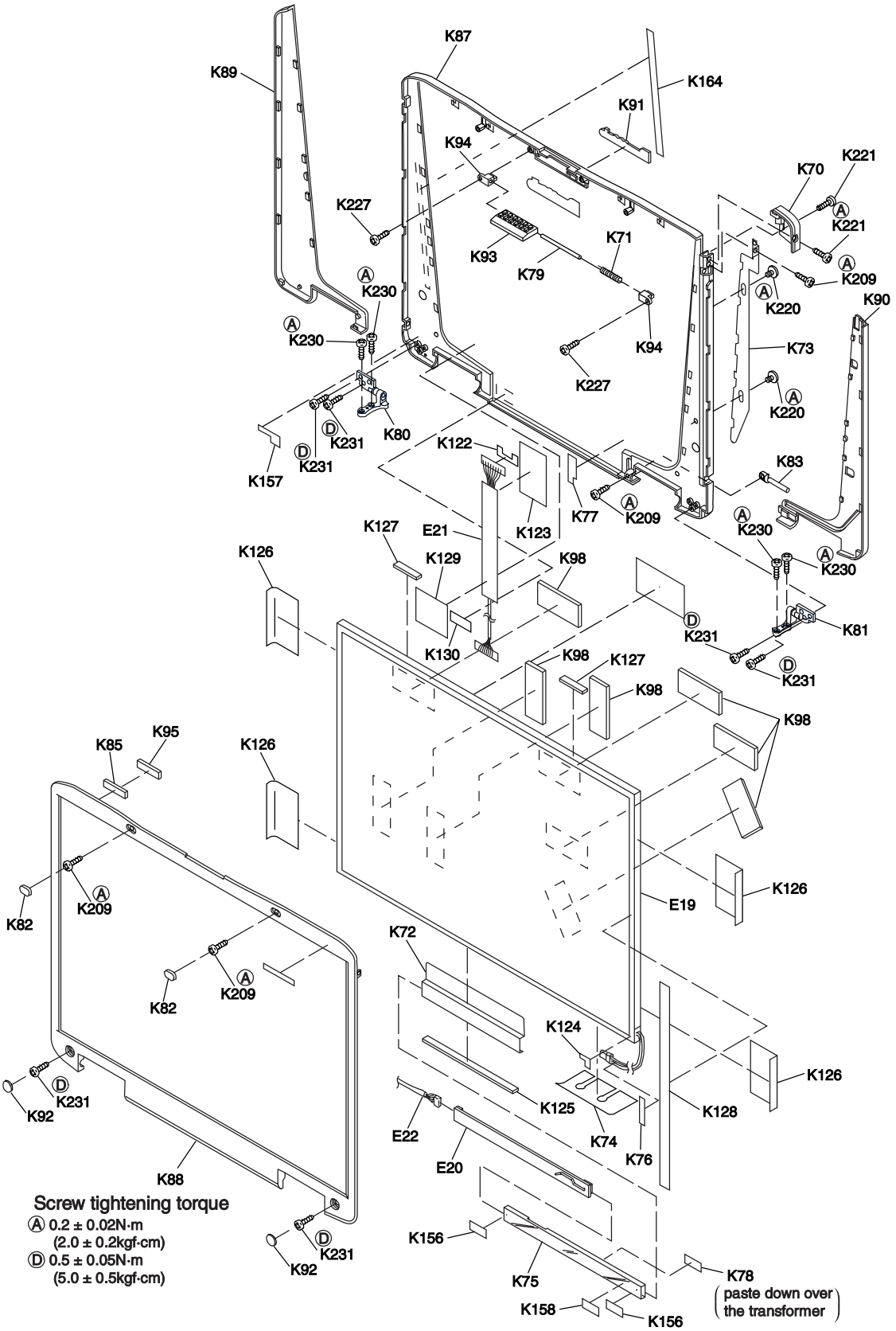
K87
K89
K164
K91
K94
K221
K70
K227
K221
K71
K93
K79
K209
K230
K220
K90
K230
K94
K73
K227
K220
K231
K80
K122
K231
K157
K83
K77
K209
K127
E21
K123
K230
K126
K129
K98
K230
K81
K231
K130
K98
K127
K231
K98
K98
K95
K85
K126
K126
K209
E19
K82
K72
K209
K82
K124
K126
K231
K92
K125
K128
E22
K74
K76
E20
K88
Screw tightening torque
Ⓐ 0.2 ± 0.02N·m
(2.0 ± 0.2kgf·cm)
Ⓓ 0.5 ± 0.05N·m
(5.0 ± 0.5kgf·cm)
K156
K231
K92
K75
K78
paste down over
the transformer
K158
K156

CD-ROM Drive (CF-VCD711)

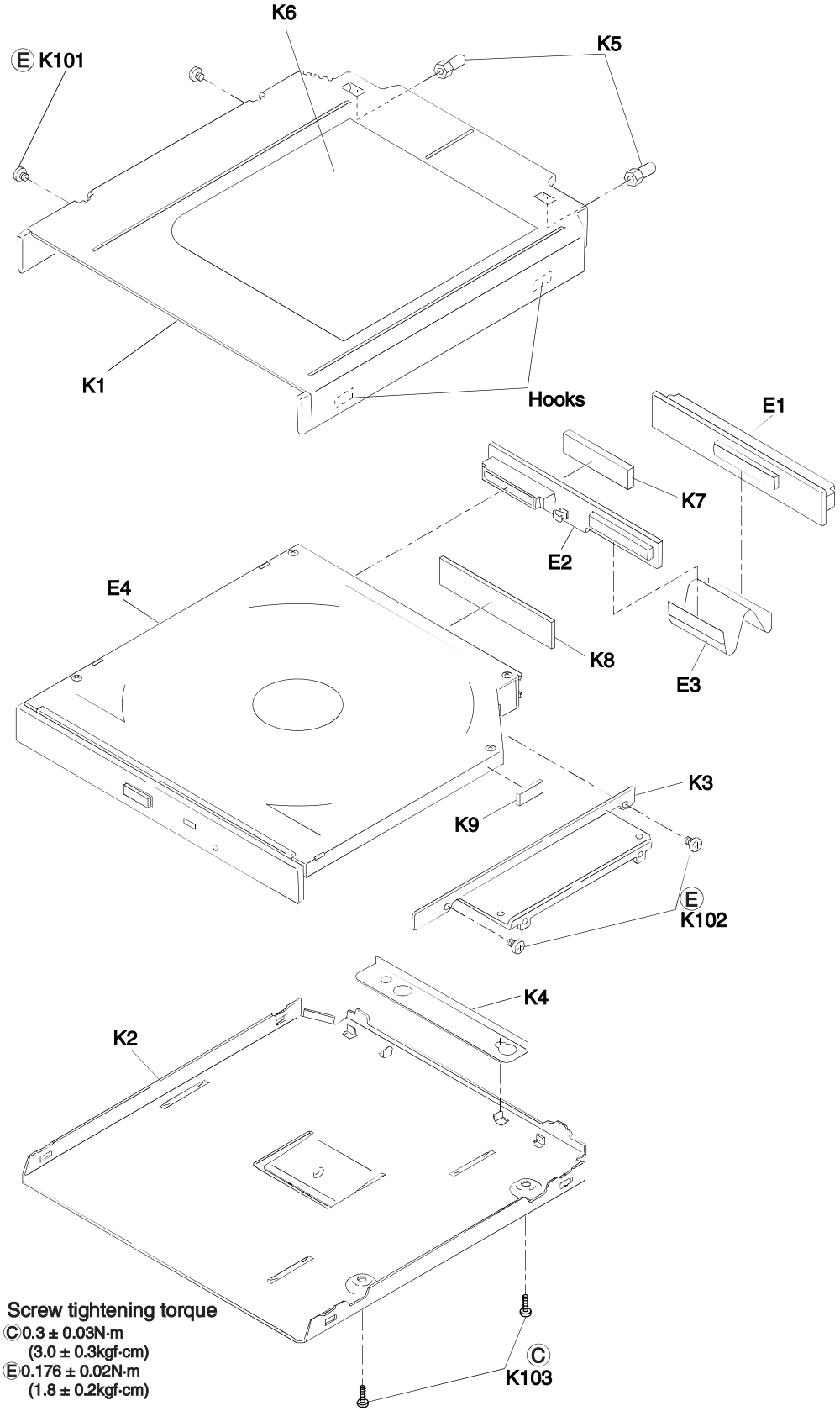

Screw tightening torque
Ⓒ 0.3 ± 0.03N·m
(3.0 ± 0.3kgf·cm)
Ⓔ 0.176 ± 0.02N·m
(1.8 ± 0.2kgf·cm)

SuperDisk Drive (CF-VFS712W)

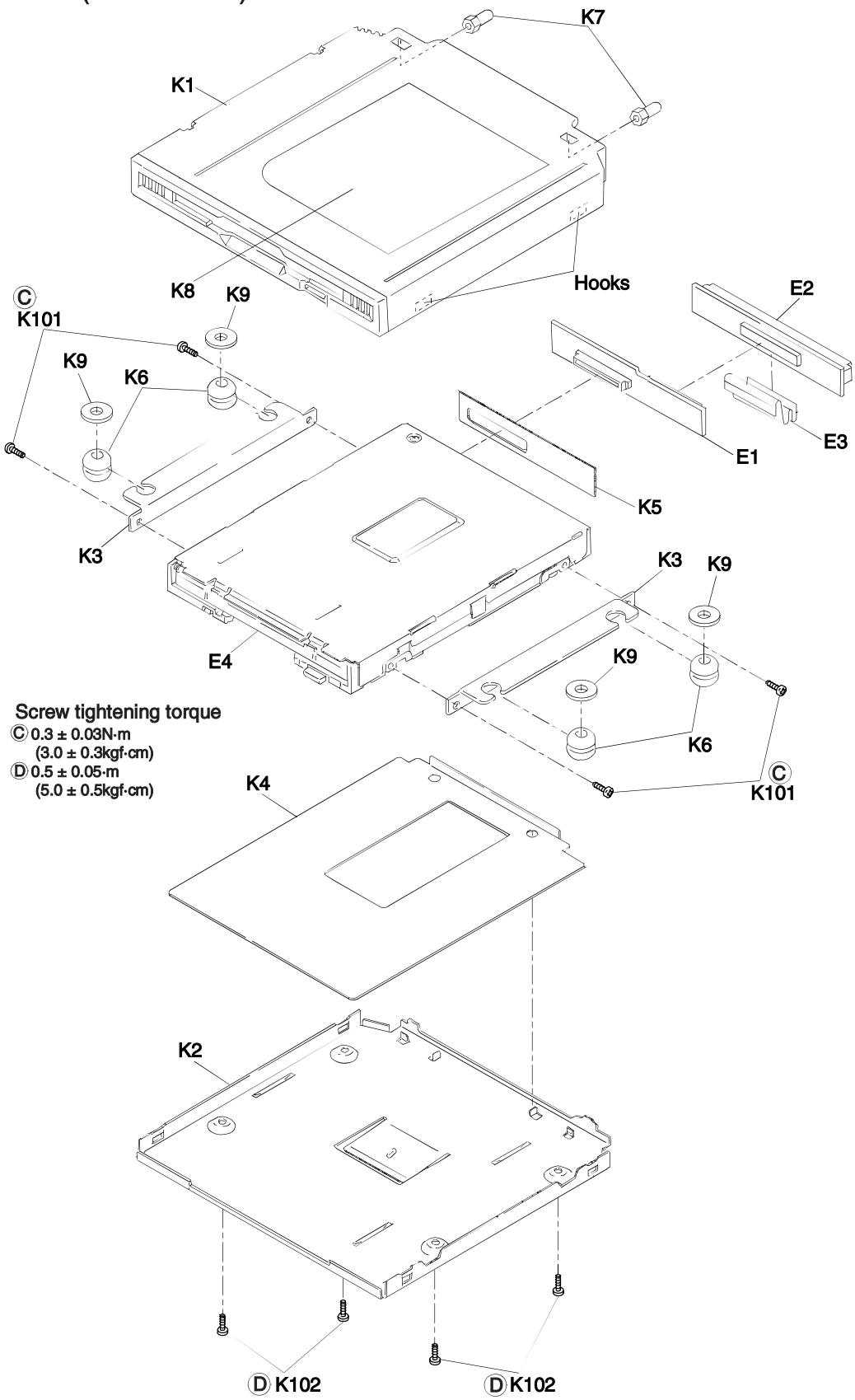

Screw tightening torque
Ⓒ 0.3 ± 0.03N·m
(3.0 ± 0.3kgf·cm)
Ⓓ 0.5 ± 0.05·m
(5.0 ± 0.5kgf·cm)

9. Replacement Parts List

9.1. CF-72

(Main Block Unit, Mechanical Parts, Accessories and Packing Materrial)

Note: Important Safety Notice
Components identified by ⚠ mark have special characteristics important for safety.
When replacing any of these components, use only manufacturer's specified parts.

REF. NO. and AREA		PART NO.	DESCRIPTION		Q'TY
Main Block Unit					
E 1		DL3U11104AAA	PCB, MAIN	RTL	1
E 2		DL3U21104AAA	PCB, LED	RTL	1
E 3		DL3U11105AAA	PCB, SUB	RTL	1
E 4		DL3U21105AAA	PCB, PAD	RTL	1
E 5		DL3U31105AAA	PCB, LID	RTL	1
E 10		DL3U11054BAA	PCB, FPC, HDD	RTL	1
E 11		DFAS9001ZA	ASS'Y, SPEAKER 36		2
E 12		DFAS9002ZA	ASS'Y, SPEAKER 20		2
E 13		UDQFVEH01	FAN MOTOR		1
E 14		DFJS637ZA	CABLE, INDICATOR		1
E 15		DFJE12M030BB	FFC, PAD		1
E 16		DFJE12M109HB	FFC, PCB, PAD		1
E 19		L5BDDDQ00001	ASS'Y, LCD		1
E 20	⚠	DFWP0119YA	INVERTER		1
E 21		DFJS635ZA	CABLE, LCD		1
E 22		DFJS636ZA	CABLE, INVERTER		1
E 23		N3CABP00002	HDD, 20GB, 2.5"		1
E 24 (M)		DFSX1A71UATG	KEYBOARD, US		1
E 24 (E)		DFSX1A72UATG	KEYBOARD		1
E 24 (F)		DFSX1A74UATG	KEYBOARD		1
E 24 (G)		DFSX1A73UATG	KEYBOARD		1
E 24 (P)		DFSX1A95UATG	KEYBOARD		1
E 24 (S)		DFSX1A76UATG	KEYBOARD		1
E 24 (T)		DFSX1A75UATG	KEYBOARD		1
E 25		DFWP0132ZA	CARD, MODEM, MINI PCI		1
E 26		DFJS638ZA	CABLE, MODEM		1
E 28		C2GAC0000077	CPU		1
E 29		K1NBF4Z00001	CONNECTOR, PCMCIA		1
E 30		CR2032/S5J	BATTERY		1
E 31		N2EAEEC00001	TOUCH PAD		1
Accessories					
A 1	⚠	CF-AA1639AM1	AC ADAPTER		1
A 2	⚠	CGP-E/620B	BATTERY PACK		1
A 3	⚠	DFJA0047ZAKK	AC CABLE		1
A 4		DFJS535ZA	CABLE, MODEM		1
A 5		CF-VFS712W	SUPERDISK DRIVE		1
A 6 (M)	⚠	DFQX5160ZA	OPERATING INSTRUCTIONS		1
A 6 (E,G,F,S,T,P)	⚠	*OPERATING INSTRUCTIONS MANUAL			1
Note: About the parts which written " * " above, please order to Computer Products Europe (CPE) written below Matsushita Electric (U.K.) Ltd. Computer Products Europe (CPE) TEL: +44-1222-736060 FAX: +44-1222-73550					
Packing Mattrial					
P 1		DFPN9111ZA	CUSHION		1
P 2		DFPK1060ZA	CASE, PACKING		1

REF. NO. and AREA		PART NO.	DESCRIPTION	Q'TY
Mechanical Parts				
K 1		DFMD7688YA	ANGLE, JACK	1
K 2		DFMD7694ZA	HOLDER, PAD	1
K 3		DFMX0828ZA	INSULATOR PCB, LED	1
K 4		DFMX0829ZA	INSULATOR PCB, SUB	1
K 5		DFMX0830ZA	INSULATOR SUB PCB, SUB 2	1
K 6		DFMX0848ZB	INSULATOR PCB, PAD	1
K 7		DFMY0257ZA	SHEET 1, THERMAL, CPU	1
K 8		DFMY0258YA	SHEET 2, THERMAL, CPU	2
K 9		DFMY3088ZA	HEAT SPLEADER	1
K 10		DFMY3089ZA	ANGLE, HEAT, FAN	1
K 11		DFMZ0032ZA	SHEET INDICATOR	1
K 12		DFHG1363ZA-1	COVER,DUST, RJ11	1
K 13		DFHG1401ZA	RUBBER, WATERPROOF	1
K 14		DFHG1404ZB	CUSHION, PAD	1
K 15		DFMX0657ZA	SHEET, CABLE	1
K 16		DFHE0399ZA	GASKET, IO-2	1
K 17		DFHE0238ZA	GASKET, LED PCB	1
K 18		DFHE0401ZA	GASKET, B, PCB, LED	1
K 19		DFHE0403ZA	GASKET, CASE, PCB	1
K 20		DFHE0405ZA	GASKET, IO-1	3
K 22		DFHE0407ZA	GASKET, CABLE, LCD	1
K 23		DFHE0419ZA	GASKET, SHAFT, EMI	1
K 24		DFKM0365ZA	CHASSIS, TOUGH	1
K 25		DFKM8138YA-0	ASS'Y, PALMREST	1
K 26		DFKM8139ZA-0	ASS'Y, COVER, CENTER	1
K 27		DFKF8128YA-0	ASS'Y, CASE, BOTTOM	1
K 27 -1		DFHG363ZA-0	RUBBER, FOOT	1
K 28		DFKF8129ZA-0	ASS'Y, COVER, BATTERY	1
K 28 -1		DFHG363ZA-0	RUBBER, FOOT	1
K 29		DFKH1010YA-0	ASS'Y, HANDLE	1
K 30		DFKE0538ZA-0	COVER, L, HINGE	1
K 31		DFKE0539ZA-0	COVER, R, HINGE	1
K 32		DFKE0540ZA-0	CAB, L, EDGE, KB	1
K 33		DFKE0541ZA-0	CAB, R, EDGE, KB	1
K 34		DFKE0542ZA-0	COVER, L, PORT	1
K 35		DFKE0543ZA-0	COVER, R, PORT	1
K 36		DFGX0252ZA-0	COVER, DIMM	1
K 37		DFBD0131ZA-0	KNOB, POWER	1
K 38		DFHR4070ZA	RING (20), SPEAKER	2
K 39		DFHR4071ZA	RING (36), SPEAKER	2
K 40		DFHR5850ZB	BLOCK, PCB	2
K 41		DFHR7855ZA	DUCT, FAN	1
K 42		DFHR7878YA	TAPE, PAD	1
K 43		DFHR7888ZA	CABLE SHEET, CABLE, LCD	1
K 44		DFHR8355ZA	CUSHION, SPEAKER	2
K 45		DFHR8359ZA	WATERPROOF CENTER	1
K 46		DFHR8363ZA	KB, WATERPROOF	1
K 49		DFHG1405ZA	CUSHION, BGA, CPU	1
K 50		DFKE0570ZA-0	COVER, SLOT, PARM	1
K 51		DFKF8127YA-0	ASS'Y, CASE, PCB	1
K 51 -1		DFHG1459ZA	FOOT PAD 2	2
K 51 -2		DFGX8006ZA-0	ASS'Y, SHUTTER, BUS	1
K 51 -3		XQN2+J4FN	SCREW	2

REF. NO. and AREA		PART NO.	DESCRIPTION	Q'TY
K 53		DFGX8007ZA-0	ASS'Y, SHUTTER, CARD	1
K 70		DFKE0544ZA-0	COVER, N, ANTENNA	1
K 71		DFUD0031ZA	LATCH, SPRING, LCD	1
K 72		DFMD3089ZA	ANGLE, INVERTER	1
K 73		DFME0121ZA	PLATE, PROTECTOR	1
K 74		DFMX0785ZA	SHEET, CABLE, INVERTER	2
K 75		DFMX0832ZA	INVERTER, INSULATION	1
K 76		DFMX0833ZA	HOLDER, CABLE, INVERTER	1
K 77		DFMX0876ZA	COVER, CABLE, LAMP	1
K 78		DFMY0272ZA	SHEET, THERMAL, INVERTER	1
K 79		DFDF3136ZA	SHAFT, KNOB, LCD	1
K 80		DFBH1109ZA	HINGE-L	1
K 81		DFBH1110ZA	HINGE-R	1
K 82		DFHG1399ZA-0	RUBBER, LEG, LCD	2
K 83		DFHE0395ZA	SHAFT, EMI, LCD	1
K 84		DFHR5874ZA	SPACER, FPC, KB	1
K 85		DFHE0418ZA	MAGNET, LID	1
K 86		DFHP7069ZA	TAPE, BOTH SIDES	1
K 87		DFKM0366ZA-0	REAR, LCD	1
K 88		DFKF0209ZA-0	CABINET, FRONT, LCD	1
K 89		DFKE0536ZA-0	PROTECTOR, L, EDGE	1
K 90		DFKE0537ZA-0	PROTECTOR, R, EDGE	1
K 91		DFGB0062ZA-0	BADGE	1
K 92		DFGX0266ZA-0	SHEET, SCREW, LCD	2
K 93		DFBD0130ZA-0	KNOB, LCD	1
K 94		DFHR5803ZA	HOLDER, KNOB, LCD	2
K 95		DFHR5839ZA	SPACER, MAGNET	1
K 98		DFHR8367ZA	DUMPER, LCD	6
K 99		DFMD2131ZA	HOLDER, HDD	1
K 100		DFHG1397ZA	DUMPER, HDD	1
K 102		DFHR5802ZA	HOLDER, CN, HDD	1
K 103		DFHR7854ZA	COVER, HDD	1
K 104 (M)	⚠	DFGT0811ZA	LABEL-M, UNIT	1
K 104 (E,F,G,S,T,P)	⚠	DFGT0812ZA	LABEL-EU, UNIT	1
K 107		DFMX0875ZA	SHEET, CABLE, PCI	1
K 108		DFHR5412ZA	CLAMP, MINI	1
K 109		DFMD2130ZA	PLATE, CONFIG, RJ45	1
K 110		DFMD7686YA	ANGLE, PORT	1
K 111		DFHR5805ZA	GUIDE (MAIN), CN	1
K 112		DFHR5804ZA	GUIDE, CN, MP	1
K 114		DFHG1441ZA	CUSHION, CHASSIS, HDD	1
K 115		DFHG1447ZA	CUSHION , 2, CN, HDD	1
K 116		DFHE0408ZA	GASKET, COVER, BATTERY	2
K 117		DFHR8368ZA	BALANCER 1, HDD	2
K 119		DFHG1440ZB	CENTER, CUSHION, PALMREST	1
K 120		DFHR8371ZA	CUSHION, SC, PALMREST	1
K 122		DFHR7912ZA	TAPE, CABLE, LCD	1
K 123		DFHE0438ZA	CLOTH, CN, LCD	1
K 124		DFMX0807ZA	PROTECTOR, A, CABLE	1
K 125		DFHR8375ZA	DUMPER, BOTTOM, LCD	1
K 126		DFHR8374ZA	DUMPER, SIDE, LCD	4
K 127		DFHR8373ZA	DUMPER, TOP, LCD	2
K 128		DFHR8376ZA	TAPE, HOLD,LCD	1
K 129		DFHE0437ZA	CLOTH 2,LCD CABLE	1

REF. NO. and AREA		PART NO.	DESCRIPTION	Q'TY
K 130		DFHE0436ZA	CLOTH 1,LCD CABLE	1
K 132		DFHG1443ZA	CUSHION 2, UPPER MP	1
K 133		DFHG1444ZB	CUSHION, UPPER, MP	3
K 134		DFHG1439ZA	CUSHION, PCB, SUB	2
K 135		DFHR7910ZB	SPASER, MINI PCI	2
K 136		DFHG1442ZB	CUSHION, CN, HDD	1
K 137		DFHE0433ZA	GASKET, 3, PALMREST	2
K 139		DFHE0432ZB	GASKET, 2, PALMREST	1
K 140		DFHG1450ZA	CUSHION, COVER, BATTERY	1
K 141		DFMD4031ZA	ANGLE, PALMREST	1
K 142		DFMX0657ZA	SHEET, PROTECTION, CABLE, LCD	2
K 143		DFMX0851ZA	CUSHION, FPC, KB	1
K 145		DFHE0236ZA	GASKET (2 X4X30)	2
K 147		DFGX0254ZA-0	SPACER, CN, BATT	1
K 148		DFGX0285ZA	COVER, PS2	1
K 149		DFHR5875ZA	CUSHION, L	1
K 150		DFHR5876ZA	SPACER, L	1
K 151		DFHR5877ZA	SPACER, DIMM	1
K 152		DFHR7777ZA	SPACER, ANGLE, MIC	1
K 153		DFHR7913ZA	WATERPROOF, FPC, KB	1
K 154		DFHR7929ZA	SHEET, SLIDE, MP	3
K 155		DFHR8372ZB	SPACER, UNDER, MP	2
K 156		DFMX0880ZA	SHEET, 2, CABLE, LAMP	2
K 157		DFHR8377ZA	SPACER, HINGE	1
K 158		DFQT6077YA	LABEL, HIGH VOLTAGE	1
K 159		DFHR8380ZA	SHEET, CN, HDD	1
K 162		DFWV99A0049	HDD Mounting Kit for Support	1
K 163		DFHG1460ZA	DUMPER, 2, HDD	2
K 164		DHP7105ZA	TEPE, BOTH SIDES	1
K 201		XYN2+J12FZ	SCREW	7
K 202		XYN2+J16FN	SCREW	2
K 203		XYN2+J6FN	SCREW	2
K 204		XTB2+16GFN	SCREW	4
K 205		XTB2+5GFN	SCREW	5
K 206		XTB26+20GFN	SCREW	2
K 207		DXHM0021ZA	SCREW	2
K 208		DFHE5020YB	SCREW	2
K 209		DFHE5025XA	SCREW	5
K 210		DXQT2+G5FUBN	SCREW	2
K 220		DXQT2+H25L	SCREW	2
K 221		DFHE5020XA	SCREW	2
K 222		DFHE5025XA	SCREW	4
K 223		XYN2+J4FN	SCREW	4
K 224		IKT0104AA	SCREW	6
K 225		DFHE5025XA	SCREW	4
K 226		XYN2+J6FN	SCREW	4
K 227		DFHE5119ZA	SCREW	2
K 228		DFHE5061ZA	SCREW	2
K 229		XQN2+J4FN	SCREW	2
K 230		XYN2+J7FN	SCREW	6
K 231		DFHE5086ZA	SCREW	6

(Main Block Unit, Mechanical Parts, Accessories and Packing Materrial)

REF. NO. and AREA		PART NO.	DESCRIPTION	Q'TY
Main PCB				
C 2 385 386		EEFCD0D101R	CAPACITOR, 2V, 100μF	3
C 3 4 388		EEFCD0D101R	CAPACITOR, 2V, 100μF	3
C 14 15 16 17 41 42 117 121 125 129 152 312 313 314 345		DCUJ1A105ZFL	CAPACITOR, 10V, 1μF	15
C 18 19 20 21 23 24 25 26 28 29 30 31 32 33 34 36 37 38 39 40 49 50 53 54 55 56 59 60 68 70 71 74 103 104 105 108 109 110 111 112 115 132 135 145 149 151 154 155 157 164 165 172 173 174 175 176 177 178 179 180 181 182 186 190191 192 205 206 207 208 209 210 213 214 215 217 218 221 222 223 224 241 243 255 258 260 261 262 265 266 278 279 280 281 282 299 309 310 311 318 319 323 324 325 326 334 347 348 349 350 407 412 436 437 439 446 447 449 460 461 462		F1G1C104A031	CAPACITOR, 16V, 0.1μF	121
C 22 27 52 64 69 73 138 147 148 163 204 233 251 253 256 257 263 270 276 290 292 297 301 305 306 320 321 328 330 341 344 346 360 361 380 410 421 428 430 431 453 463 464 465		F1G1C104A031	CAPACITOR, 16V, 0.1μF	44
C 47 48		ECST0JX476R	CAPACITOR, 6.3V, 47μF	2
C 51		F1G1H222A412	CAPACITOR, 50V, 2200F	1
C 57 72 92 93 94 118 122 126 130 166 168 170 171 369 393 401 414 415 417 418 422		DCUM1H103ZFL	CAPACITOR, 50V, 0.01μF	21
C 61 106 107 113 114 116 120 124 128 150 153 159 160 167 169 246		DCUM1H103ZFL	CAPACITOR, 50V, 0.01μF	16
C 62 65 98 99 100 156 158 234 336 337 338 339 340 440 441 442		DCUE1A106ZFL	CAPACITOR, 10V, 10μF	16
C 63 97 133 134 183 184 211 212 227 228 229 230 267 273 277 322 327 438 443		DCUE1A106ZFL	CAPACITOR, 10V, 10μF	19
C 85 87		DCUM1H330JCL	CAPACITOR, 50V, 33pF	2
C 89 95 96		DCUM1H100DCL	CAPACITOR, 50V, 10pF	3
C 101 140 194 232 315 316 317 353 429		F1G1H102A401	CAPACITOR, 50V, 1000pF	9
C 102 146 329 331 362 363 383 392 403		DCUA0J475MBY	CAPACITOR,6.3V,4.7μF	9
C 119 123 127 131 291 293 394 396 402 406		DCUJ1A105ZFL	CAPACITOR, 10V, 1μF	10
C 136 137		DCUM1H220JCL	CAPACITOR, 50V, 22pF	2
C 139 231 264 268 343 351		F1G1H102A401	CAPACITOR, 50V,1000pF	6

REF. NO. and AREA		PART NO.	DESCRIPTION	Q'TY
C 141 142 143 144 247 248 249 250 375 379 381		DCUM1H470JCL	CAPACITOR, 50V, 47pF	11
C 161 162		DCUK1A226ZFL	CAPACITOR, 10V, 22μF	2
C 187 188		ECST1AX226R	CAPACITOR, 10V, 22μF	2
C 189 245 445		DCUM1H101JCL	CAPACITOR, 50V, 100pF	3
C 193 195 196		DCUM1H330JCL	CAPACITOR, 50V, 33pF	3
C 197 198 199 200 201 202		F1G1H221A401	CAPACITOR, 50V, 2220F	6
C 216 219 225 226		ICUV1C475ZFX	CAPACITOR, 16V, 4.7μF	4
C 220 244 269 354		DCUA0J475MBY	CAPACITOR, 6.3V, 4.7μF	4
C 235 236 239 240 332 356 357 358 399		ECUV1C105ZFX	CAPACITOR, 16V, 1μF	9
C237 238		DCUM1H681KBL	CAPACITOR, 50V, 680pF	2
C252 254		F1G1H6R0A452	CAPACITOR, 50V, 6pF	2
C 259 271 272 274 275 283 284 285 286 288 289 298 376		ECUV1C224ZFV	CAPACITOR, 16V, 0.22μF	13
C 287 409 411 458		DCUC0J106KBY	CAPACITOR, 16V, 10μF	4
C 294 296 307 308 342 408 424 425 426 427		DCUM1H101JCL	CAPACITOR, 50V, 100pF	10
C 295		ECST1CX106R	CAPACITOR, 16V, 10μF	1
C 300		ECST1CD476R	CAPACITOR, 16V, 47μF	1
C 302		F1G1H471A401	CAPACITOR, 50V, 470pF	1
C 303 304		EEVHA0J470R	CAPACITOR, 6.3V, 47μF	2
C 333 367 368 374 400		ECUV1E104ZFV	CAPACITOR, 25V, 0.1μF	5
C 35		DCS1AN336CE	CAPACITOR, 10V, 33μF	1
C 355		ECUV1C224ZFV	CAPACITOR, 16V, 0.22μF	1
C 364 365 395		ECUV1E104ZFV	CAPACITOR, 25V, 0.1μF	3
C 366		ECUV1C105ZFX	CAPACITOR, 16V, 1μF	1
C 370 371 372 373 413		DCUE1C106MBY	CAPACITOR, 16V, 10μF	5
C 377		ECUV1H103KBV	CAPACITOR, 50V, 0.01μF	1
C 378		F1G1H331A401	CAPACITOR, 50V, 330pF	1
C 384		DCUC0J106KBY	CAPACITOR, 6.3V, 10μF	1
C 389		DCS1ATA101M	CAPACITOR, 10V, 100pF	1
C 390 391 404		EEFCD0J470R	CAPACITOR, 2V, 47μF	3
C 398		DCUE1C106MBY	CAPACITOR, 16V, 10μF	1
C 405 448		DCS0JTA151M	CAPACITOR, 6.3V, 150pF	2
C 416 423		ECST1CD686R	CAPACITOR, 16V, 68μF	2
C 434		F1G1H680A410	CAPACITOR, 50V, 68pF	1
C 450		F1G0J474A003	CAPACITOR, 6.3V, 0.47μF	1
C 454		D4ED1120A002	VARISTER	1
C 468		DCUC1C475KBY	CAPACITOR, 16V, 4.7μF	1
C 459		F1G1C104A031	CAPACITOR, 16V, 0.1μF	1
CA 1 2 3		DEAAS221K50K	CAPACITOR ARRAY, 220pF	3
CA 4		DEAAS221K50K	CAPACITOR ARRAY, 220pF	1
CA 5 6		DEAAC101K50K	CAPACITOR ARRAY, 100pF	2
CN 1		K1KA60A00106	CONNECTOR, FOR LED PCB	1
CN 2		K1MME4B00012	CONNECTOR, FOR SO-DIMM	1
CN 3		DFJP02C75YAJ	CONNECTOR, FOR RTC BUTTERY	1
CN 4 5		K1FB104B0017	CONNECTOR, FOR USB	2
CN 6		K1FB115E0004	CONNECTOR, FOR VGA	1
CN 7		K1MMF4A00001	CONNECTOR, FOR PCMCIA	1
CN 9		K1FB125E0002	CONNECTOR, FOR PARALLEL PORT	1
CN 10		K1FA109E0002	CONNECTOR, FOR SERIAL PORT	1
CN 11		IHC0722AA	CONNECTOR, FOR PS/2 MOUSE	1
CN 13		DFJP152ZA200	CONNECTOR, FOR SUB PCB	1
CN 14		DFJS553ZA100	CONNECTOR, FOR PORT REPLICATOR	1

REF. NO. and AREA		PART NO.	DESCRIPTION	Q'TY
CN 15		DFJP173ZA002	CONNECTOR, FOR MINI-PCI	1
CN 16		DFJP173ZA005	CONNECTOR, FOR MINI-PCI 1	1
CN 17		K2LB102B0016	CONNECTOR, FOR FOR RJ11(MODEM)	1
CN 18		K2LC108B0022	CONNECTOR, FOR RJ45(LAN)	1
CN 19		K1MMC4B00003	CONNECTOR, FOR MINI-PCI TYPE 3	1
CN 20		DFJS265ZA012	CONNECTOR, FOR EC FLASH	1
CN 21		DFJS225ZA100	CONNECTOR, FOR CONFIG PCB	1
CN 22		K1MMC4B00002	CONNECTOR, FOR MINI-PCI TYPE 3	1
CN 23		K1MP06B00011	CONNECTOR, FOR MINI-PCI 2	1
D 1 2 9 10		MA729-TX	DIODE	4
D 3 4 12		DEDRB715FT7	DIODE	3
D 5 6 7 30 31 32 33		DEDDA204UT	DIODE	7
D 8		DEDRB411DT47	DIODE	1
D 11		MA729-TX	DIODE	1
D 13 14		DEDRB081L20	DIODE	2
D 15 18 29		DAN222TL	DIODE	3
D 16		DEDUDZ9R1BT	DIODE	1
D 17		DEDUDZ18BT	DIODE	1
D 19 20		DEDUDZ6R2BT	DIODE	2
D 21 22		DEDUDZ5R1BT	DIODE	2
D 23		DED03P2JT1-D	DIODE	1
D 24		DED1SS355T17	DIODE	1
D 25		DEDRB081L20	DIODE	1
D 26 28		DEDSFPB64V	DIODE	2
D 27		DAP222TL	DIODE	1
D 34 35 36		DEDDA204UT	DIODE	3
D37		D4ED1120A002	VARISTER	1
F 1		XBADMMCT010U	FUSE (1A)	1
F 2		XBAD4517R00L	FUSE (7A)	1
IC 1		K3E495E00001	SOCKET, CPU	1
IC 2		DAW82443BXCI	IC, 443BX	1
IC 3		DAFW82371M-I	IC, PIIX4	1
IC 4		C1DB00000525	IC, VGA CONTROLLER	1
IC 5		DA97338VJA2N	IC, SUPER I/O	1
IC 6		D1021ARQX1P	IC, TEMPERATURE SENSOR	1
IC 7		C1DB00000475	IC, GCL	1
IC 8		DA9716CTBX3A	IC, PLL	1
IC 9		DAB664ETBX3A	IC, CLOCK BUFFER	1
IC 10 12 14 16		C3ABQG000008	IC, SDRAM	4
IC 11 13 15 17		C3ABQG000008	IC,SDRAM	4
IC 18 44 58		DA7S14UT85L0	IC, INVERTER	3
IC 19		C0DBZHG00004	IC, USB POWER CONTROLLER	1
IC 20 61		DA3257QXX1T	IC, BUFFER	2
IC 21		C1DB00000557	IC, SMBUS GP I/O	1
IC 22		DA7SH32U85L0	IC, OR GATE	1
IC 23 64 66 67		DA7SH08U85L0	IC, AND GATE	4
IC 24		C0DBEHG00002	IC, REGULATOR	1
IC 25 26		DA7ST08U85L0	IC, AND GATE	2
IC 27 32 46		DA7SH08U85L0	IC, AND GATE	3
IC 28		DARB5C4782BR	IC, PC CARD CONTROLLER	1
IC 29		DA2563A1SX2V	IC, REGULATOR	1
IC 30		ADMZ11EARSRL	IC, BUFFER	1
IC 31		DA38802M280M	IC, 1CHIP MICOM (8 BITS)	1
IC 33		C1DB00000512	IC, SOUND	1
IC 34		DALP298050N	IC, REGULATOR	1

REF. NO. and AREA		PART NO.	DESCRIPTION	Q'TY
IC 35		C1DB00000536	IC, SOUND AMP	1
IC 36		C0ABBA000075	IC, OP AMP	1
IC 37		DAPST9140NXT	IC, REGULATOR	1
IC 38 39		DAPST9125NXT	IC, REGULATOR	2
IC 40 41		DA7W14UT12L0	IC, INVERTER	2
IC 43		TVHC32FTL	IC, OR GATE	1
IC 45		DA3125QXX1T	IC, BUFFER	1
IC 47 48		DA7W53UT12L0	IC, MIXER	2
IC 49		DAF3434T000H	IC, EC	1
IC 50		DA7S14UT85L0	IC, SW	1
IC 51		DALP298030N	IC, SW	1
IC 52		C0DBAFH00006	IC, DC/DC CONTROLLER	1
IC 53		C0DBAZZ00039	IC, DC/DC CONTROLLER	1
IC 54		C0DBEZG00006	IC, REGULATOR	1
IC 55		XC62FP2502PR	IC, REGULATOR	1
IC 56		DAM2370R121P	IC, REGULATOR	1
IC 57		DA7W02UT12L0	IC, NOR GATE	1
IC 59		DA7S04UT85L0	IC, INVERTER	1
IC 60		DA7S32UT85L0	IC, OR GATE	1
IC 62		DA7S02UT85L0	IC, NOR GATE	1
IC 65		DA29LV0409FJ	IC, FLASH ROM (BIOS)	1
JK 1		DFJJD5S08ZAH	JK, FOR MIC	1
JK 2		DFJJD8S09ZAH	JK, FOR HEADPHONE	1
JK 3		DFJJB3Z07ZAH	JK, DC IN	1
L 1		DDAZR4R7KT2L	FERRITE BEAD	1
L 2 4 18 19 20 21 22		DDB5Z005-L	FERRITE BEAD	7
L 3 5 45 51		DDB5Z005-L	FERRITE BEAD	4
L 10 11 14 15		DDB5Z031J-L	FERRITE BEAD	4
L 12 13 16 17		DDB5Z032A-L	FERRITE BEAD	4
L 23 24 25 26 28 29 30		DDB5Z034B-Y	FERRITE BEAD	7
L 27 31		DDB5Z034B-Y	FERRITE BEAD	2
L 32 33 34 35		DDB5Z024E-L	FERRITE BEAD	4
L 36 37		DDB5Z028C-L	FERRITE BEAD	2
L 38 44		ERJ3GEY0R00V	RESISTOR 1/16W,0Ω	6
L39 40 42 43		DDB5Z021C-Y	FERRITE BEAD	4
L 46		DDB5Z039A-Y	FERRITE BEAD	1
L 47 50		DDAZS1R8NT2T	COIL, 1.8mH	2
L 48 49		DDAZZ100MT-T	COIL, 10mH	2
LA 1 2		DDB9Z009C-Y	FERRITE BEAD	2
LD 1		B3ABB0000007	LED	1
PS 1 2	⚠	ERY32SA120VA	POLY SW (1.2A)	2
Q 1		DA3LN01STL	TRANSISTOR	1
Q 3 14 17 44 45 52		DETC114YETL	TRANSISTOR	6
Q 4 15 18 46		DETA144EETL	TRANSISTOR	4
Q 5		DAUPA1700AE2	TRANSISTOR	1
Q 6 8 10 11 22 31 32 51		DETC114YETL	TRANSISTOR	8
Q 7		2SJ187TD	TRANSISTOR	1
Q 12 33 34 43		DETA144EETL	TRANSISTOR	4
Q 13		DASI6410DQTI	TRANSISTOR	1
Q 16		DETC144EETL	TRANSISTOR	1
Q 19		DASI4435DYTA	TRANSISTOR	1
Q 20 23 28 37 38 39 40 41 42 48 49 50		2SK3019TL	TRANSISTOR	12
Q 21		DAS14435DYTA	TRANSISTOR	1

REF. NO. and AREA		PART NO.	DESCRIPTION	Q'TY
Q 24 53		DAFDS6690A	TRANSISTOR	2
Q 25 26 27		DAFDS6670A	TRANSISTOR	3
Q 29 30		B1DFED000012	TRANSISTOR	2
Q 35 36		B1DFED000012	TRANSISTOR	2
Q 47		DASI6410DQT1	TRANSISTOR	1
R 1		ERJ3EKF1100V	RESISTOR, 1/16W, 110Ω	1
R 4 24		ERJ3EKF56R2V	RESISTOR, 1/16W, 56.2Ω	2
R 5 13 83		ERA3YED102V	RESISTOR, 1/16W, 1KΩ	3
R 6 14 15		ERA3YED202V	RESISTOR, 1/16W, 2KΩ	3
R 7		ERJ3EKF56R2V	RESISTOR, 1/16W, 56.2Ω	1
R 8		ERJ2GEJ271X	RESISTOR, 1/4W, 270Ω	1
R 9 10 54 55 56 57 58 59 60 61 62 145 170 171 345 350 379		ERJ2GEJ330X	RESISTOR, 1/4W, 33Ω	17
R 11 23 36 264		ERJ2GEJ271X	RESISTOR, 1/4W, 270Ω	4
R 12 82		ERA3YED152V	RESISTOR, 1/16W, 1.5KΩ	2
R 16 26 100 106 229 230 368		ERJ2GEJ102X	RESISTOR, 1/4W, 1KΩ	7
R 17 40 46 72 74 80 81 89 90 108 111 114 167 214 222 223 224 249 285 321 347 377 378 386 428		ERJ2GEJ103X	RESISTOR, 1/4W, 10KΩ	25
R 18		ERJ2GEJ681X	RESISTOR, 1/4W, 680Ω	1
R 19 95 96 107		ERJ2GEJ102X	RESISTOR, 1/4W, 1KΩ	4
R 20 21		ERJ2GEJ151X	RESISTOR, 1/4W, 150Ω	2
R 22		ERJ2GEJ152X	RESISTOR, 1/4W, 1.5KΩ	1
R 25 29		ERJ2GEJ152X	RESISTOR, 1/4W, 1.5KΩ	2
R 31 34 37 64 65 125 126 127 128 129 130 131 132 169 218 220 270 387 389 390 424		ERJ2GE0R00X	RESISTOR, 1/4W, 0Ω	21
R 35 88 99 158 238 240 255 260 265 369 371		ERJ2GEJ473X	RESISTOR, 1/4W, 47KΩ	11
R 38 43 52 68 177 194 195 196 197 257 259 262 263 266 311 344 370 380		ERJ2GEJ103X	RESISTOR, 1/4W, 10KΩ	18
R 41		ERJ2GEJ151X	RESISTOR, 1/4W, 150Ω	1
R 42 152 153		ERJ2GEJ105X	RESISTOR, 1/4W, 1MΩ	3
R 45 47 63 67 78 79		ERJ2GEJ100X	RESISTOR, 1/4W, 10Ω	6
R 48 49 154 155		ERJ2GEJ220X	RESISTOR, 1/4W, 22Ω	4
R 50 66 76		ERJ2GEJ180X	RESISTOR, 1/4W, 18Ω	3
R 53 226		ERJ2GEJ330X	RESISTOR, 1/4W, 33Ω	2
R 77 256 394		ERJ2GEJ104X	RESISTOR, 1/4W, 100KΩ	3
R 85 163 164 165 280 281 282 283 284 346 373		ERJ2GEJ101X	RESISTOR, 1/4W, 100Ω	11
R 86		ERJ3GEYJ106V	RESISTOR, 1/16W, 10MΩ	1
R 87		ERJ2GEJ154X	RESISTOR, 1/4W, 150KΩ	1
R 91 92 93 94 183		ERJ2GEJ153X	RESISTOR, 1/4W, 15KΩ	5
R 97 98 239 279 376		ERJ2GEJ104X	RESISTOR, 1/4W, 100KΩ	5
R 109 112 116 117 118 119 120 121 122 174 231 232 292 293 294 306 384 392 423		ERJ2GE0R00X	RESISTOR, 1/4W, 0Ω	19
R 123 124		ERA3YED361V	RESISTOR, 1/16W, 360Ω	2
R 146 148 150 188		ERJ2GEJ222X	RESISTOR, 1/4W, 2.2KΩ	4
R 147 149 151		ERJ6ENF75R0V	RESISTOR, 1/10W, 75.0Ω	3

REF. NO. and AREA		PART NO.	DESCRIPTION	Q'TY
R 159 199 202 212 213 216 225 254 261		ERJ2GEJ473X	RESISTOR, 1/4W, 47KΩ	9
R 160		DBT10KC1513P	THERMISTOR, 1W, 151KΩ	1
R 162		ERJ6GEYJ120V	RESISTOR, 1/10W, 12Ω	1
R 166		ERJ2GEJ472X	RESISTOR, 1/4W, 4.7KΩ	1
R 173 385		ERJ2GEJ105X	RESISTOR, 1/4W, 1MΩ	2
R 176 209		ERJ2GEJ471X	RESISTOR, 1/4W, 470Ω	2
R 180 181 382		ERJ2GEJ223X	RESISTOR, 1/4W, 22KΩ	3
R 182		ERJ2GEJ123X	RESISTOR, 1/4W, 12KΩ	1
R 184 200 233		ERJ3GEY0R00V	RESISTOR, 1/16W, 0Ω	3
R 185 186 187 207		ERJ2GEJ472X	RESISTOR, 1/4W, 4.7KΩ	4
R 189 190 381		ERJ2GEJ183X	RESISTOR, 1/4W, 18KΩ	3
R 191 192 193		ERJ2GEJ183X	RESISTOR, 1/4W, 18KΩ	3
R 198 241 242 243 253		ERJ2GEJ101X	RESISTOR, 1/4W, 100Ω	5
R 210 211		ERJ2GEJ222X	RESISTOR, 1/4W, 2.2KΩ	2
R 215 227 228		ERJ6GEY0R00V	RESISTOR, 1/10W, 0Ω	3
R 219		ERJ6GEY0R00V	RESISTOR, 1/10W, 0Ω	1
R 235		ERJ3GEY0R00V	RESISTOR, 1/16W, 0Ω	1
R 247 248		DBUPPR0042TW	FUSE RESISTOR (0.042A)	2
R 250		ERJ2GEJ562X	RESISTOR, 1/4W, 5.6KΩ	1
R251 252		ERJ3GEY750V	RESISTOR, 1/16W, 75Ω	
R 258		ERJ2GEJ333X	RESISTOR, 1/4W, 33KΩ	1
R 271 351 352		ERA3YED103V	RESISTOR, 1/16W, 10KΩ	3
R 274 275 277 278		ERJ2GEJ562X	RESISTOR, 1/4W, 5.6KΩ	4
R 276		ERJ2GEJ3R3X	RESISTOR, 1/4W, 3.3Ω	1
R 286 287		ERJ6GEYJ222V	RESISTOR, 1/10W, 2.2KΩ	2
R 288 289		ERJ2GEJ474X	RESISTOR, 1/4W, 470KΩ	2
R 290 312		ERJ2GEJ100X	RESISTOR, 1/4W, 10Ω	2
R 291		ERJ2GEJ333X	RESISTOR, 1/4W, 33KΩ	1
R 295		ERA3YED103V	RESISTOR, 1/16W, 10KΩ	1
R 296		ERA3YED153V	RESISTOR, 1/16W, 15KΩ	1
R 297		ERJ2GEJ681X	RESISTOR, 1/4W, 680Ω	1
R 298		ERA3YED333V	RESISTOR, 1/16W, 33KΩ	1
R 299 300 301 302 303 304		DBJ14RR022VM	RESISTOR, 1/4W, 0.022Ω	6
R 307 308 318		DBJ14RR033VM	RESISTOR, 1/14W, 0.033Ω	3
R 317		DBJ14RR047VM	RESISTOR, 1/14W, 0.047Ω	1
R 319		ERA3YED102V	RESISTOR, 1/16W, 1KΩ	1
R 320		ERA3EED4991V	RESISTOR, 1/16W, 4990Ω	1
R 323 324 325 326 327 328		ERJ2GEJ564X	RESISTOR, 1/4W, 560KΩ	6
R 329 330 331 332 393		ERJ6GEYJ220V	RESISTOR, 1/10W, 22Ω	5
R 333 334		ERJ6GEYJ100V	RESISTOR, 1/10W, 10Ω	2
R 342 343		J0JCC0000092	FERRITR BEAD	2
R 353		ERJ2GEJ561X	RESISTOR, 1/4W, 560Ω	1
R 354 355 356 367		ERJ2GEJ270X	RESISTOR, 1/4W, 27KΩ	4
R 422		ERJ2GEJ331X	RESISTOR, 1/4W, 330Ω	1
R 426		DBJ14RR033VM	RESISTOR, 1/4W, 0.033Ω	1
RA 3		DEARA8AJ152M	RESISTOR ARRAY, 1.5KΩ	1
RA 4 47 48		DEARA8AJ472M	RESISTOR ARRAY, 4.7KΩ	3
RA 6 7 8 9 10		EXBV8V100JV	RESISTOR ARRAY, 10Ω	5
RA1 2		EXBV8V102JV	RESISTOR ARRAY, 1KΩ	2
RA 11 12 13 14 15 16 17 18		DEARA8CJ180M	RESISTOR ARRAY, 18Ω	8
RA 19 20 21 29 33 35 50		DEARA8AJ103M	RESISTOR ARRAY, 10KΩ	7
RA 22 31		EXBV8V103JV	RESISTOR ARRAY, 10KΩ	2
RA 23 25		DEARA8AJ473M	RESISTOR ARRAY, 47KΩ	2

REF. NO. and AREA		PART NO.	DESCRIPTION	Q'TY
RA 24 53		DEARA8AJ473M	RESISTOR ARRAY, 47KΩ	2
RA 26 27 28 32 34 36 37 38		DEARA8AJ103M	RESISTOR ARRAY, 10KΩ	8
RA 30		EXBV8V473JV	RESISTOR ARRAY, 47KΩ	1
RA 39 40 42		EXBV8V473JV	RESISTOR ARRAY, 47KΩ	3
RA 41		DEARA8AJ102M	RESISTOR ARRAY, 1KΩ	1
RA 43		EXBV8V103JV	RESISTOR ARRAY, 10KΩ	1
RA 44 45 46		EXBV8V220JV	RESISTOR ARRAY, 22Ω	3
RA 49		EXBV8V330JV	RESISTOR ARRAY, 33Ω	1
RA 54		EXBV8V104JV	RESISTOR ARRAY, 100KΩ	1
RA 55		EXBV8VR000V	RESISTOR ARRAY, 0Ω	1
SW 1		K0D444A00024	PLUG	1
X1		DECU14318L6U	OSCILLATOR (14.31818MHz)	1
X2		DECU00032M1D	OSCILLATOR (32.768KHz)	1
X3 5		DEBI8R00N1LX	OSCILLATOR (8MHz)	2
X4		H0J491500005	OSCILLATOR (49.152MHz)	1
LED PCB				
C 901 902		DCUA0J475MBY	CAPACITOR, 6.3V, 4.7μF	2
C 903		ECUV1C105ZFX	CAPACITOR, 16V, 1μF	1
C 904 906 908 910		F1G1C104A031	CAPACITOR, 16V, 0.1μF	4
C 905 907		DCUE1A106ZFL	CAPACITOR, 10V, 10μF	2
C 912 913 915 916 918 919		DCUM1H100DCL	CAPACITOR, 50V, 10pF	6
C 914 917 920		DCUM1H103ZFL	CAPACITOR, 50V, 0.01μF	3
C 922 923		EEVHP1C100R	CAPACITOR, 16V, 10μF	2
CN 901		K1KB60A00079	CONNECTOR, FOR LED	1
CN 902		K1KA20B00111	CONNECTOR, FOR LCD	1
CN 903		DFJP201ZA006	CONNECTOR, FOR INVERTER	1
CN 905		DFJP201ZA005	CONNECTOR, FOR TOUCH PANEL	1
CN 906 908		DFJP201ZA002	CONNECTOR, FOR SPERKER(LARGE)	2
CN 907 909		DFJP201ZA003	CONNECTOR, FOR SPERKER(SMALL)	2
D 901		MA729-TX	DIODE	1
D 902		DAN222TL	DIODE	1
IC 901		DEDHRM230S	IC, LED	1
L 901 904		DDB5Z028C-L	FERRITE BEAD	2
L 902 903		DDB5Z024E-L	FERRITE BEAD	2
L 907 911 913 914 915		DDB5Z005-L	FERRITE BEAD	5
L 908 912 916		DDB5Z005-L	FERRITE BEAD	3
LD 901 902 903 905		SEC1703C	LED	4
LD 904		SEC2764C	LED	1
Q 902		DETA144EETL	TRANSIATOR	1
Q 903 906		DETC114YETL	TRANSIATOR	2
Q 905 907		DETA144EETL	TRANSISTOR	2
R 901		ERJ2GEJ472X	RESISTOR, 1/4W, 4.7KΩ	1
R 902 903 907 908 909 910 911 912 913 914		ERJ2GEJ100X	RESISTOR, 1/4W, 10Ω	10
R 904 905		ERJ2GEJ222X	RESISTOR, 1/4W, 2.2KΩ	2
R 906		DBJ8GF1R50VM	RESISTOR, 1/8W, 1.5Ω	1
R 915		ERJ2GEJ102X	RESISTOR, 1/4W, 1KΩ	1
R 917 920		ERJ2GEJ331X	RESISTOR, 1/4W, 330Ω	2
R 918		ERJ2GEJ821X	RESISTOR, 1/4W, 820Ω	1
R 919 921		ERJ2GEJ331X	RESISTOR, 1/4W, 330Ω	2
R 996 997 998 999		ERJ3GEYJ102V	RESISTOR, 1/16W, 1KΩ	4
SUB PCB				
C 801 803 804 805 807 809 813 814 817 825 832 845 852		ECUV1E104ZFV	CAPACITOR, 25V, 0.1μF	13

REF. NO. and AREA		PART NO.	DESCRIPTION	Q'TY
C 802 812 815		ECUV1E104ZFV	CAPACITOR, 25V, 0.1μF	3
C 808 811		ECST1CD686R	CAPACITOR, 16V, 68μF	2
C 810		ECUV1H103KBV	CAPACITOR, 50V, 0.01μF	1
C 816		DCUE1A106ZFL	CAPACITOR, 10V, 10μF	1
C 818 829		DCUE1C106MBY	CAPACITOR, 16V, 10μF	2
C 819 820 822 851		ECUV1C105ZFX	CAPACITOR, 16V, 1μF	4
C 821		ECUV1C104KBV	CAPACITOR, 16V, 0.1μF	1
C 823		ECUV1C334ZFV	CAPACITOR, 16V, 0.33μF	1
C 824		ECUV1C473KBV	CAPACITOR, 16V, 0.047μF	1
C 826 848		DCUA0J475MBY	CAPACITOR, 6.3V, 4.7μF	2
C 827		DCUA1C225ZFY	CAPACITOR, 16V, 2.2μF	1
C 828		ECUV1H101JCV	CAPACITOR, 50V, 100pF	1
C 830		EEVFC1C470P	CAPACITOR, 16V, 47μF	1
CA 801 802		DEAAS221K50K	CAPACITOR ARRAY, 220PF	2
CN 801		DFJS13N24ZAJ	CONNECTOR, FOR KB IN	1
CN 802		DFJS209YA016	CONNECTOR, FOR KB OUT	1
CN 803		DFJS318ZA200	CONNECTOR, FOR SUB-MAIN	1
CN 804 810		DFJS243ZA012	CONNECTOR, FOR SUB-PAD	2
CN 805		DFJS305ZA040	CONNECTOR, FOR HDD	1
CN 806		DFJP083XA160	CONNECTOR, FOR MP160	1
CN 808		K1KA08A00242	CONNECTOR, FOR BATTERY	1
CN 809		K1KA07A00132	CONNECTOR, FOR SUB-LTD	1
CN 811		DFJP02C75YAJ	CONNECTOR, FOR FAN	1
CN 812		K1MN10A00043	CONNECTOR, FOR SMART CARD	1
D 802 803 804 818 819		DEDDA204UT	DIODE	5
D 805 806 807 810 820		DEDDA204UT	DIODE	5
D 808 809		DEDFS1J3TP	DIODE	2
D 811 812		DEDRB081L20	DIODE	2
D 813		DAN222TL	DIODE, RECTIFIER	1
D 814		DAN222TL	DIODE, RECTIFIER	1
D 815		DEDSPB64SVR	DIODE	1
IC 801 802		DA32X384CBT	IC, BUFFER	2
IC 803		DA7S02UT85L0	IC, NOR GATE	1
IC 804		DA7SH08U85L0	IC, AND GATE	1
IC 805		C1DB00000534	IC, CHARGE	1
IC 806 808		DAS80769SN1W	IC, SW	2
IC 807		DAS80769SN1W	IC, SW	1
L 801 802 803		DDB5Z028C-L	FERRITE BEAD	3
L 804		G1C330MA0022	POWER INDUCTOR	1
Q 801 804 805 806 807 809 811 818 823 827 831 838		DETC114YETL	TRANSISTOR	12
Q 802 808 812 819 835		DETA144EETL	TRANSISTOR	5
Q 803		DAUPA1700AE2	TRANSISTOR	1
Q 810		2SK3019TL	TRANSISTOR	1
Q 813		DAFDS6912A	TRANSISTOR	1
Q 814 820		DETC144EETL	TRANSISTOR	2
Q 815 821 822 826 833 834 836 837		DETC114YETL	TRANSISTOR	8
Q 816		DETC144EETL	TRANSISTOR	1
Q 817		DASI4953DYT1	TRANSISTOR	1
Q 824 825 828 829		DASI6415DQT1	TRANSISTOR	4
Q 832		2SJ197-T1	TRANSISTOR	1
R 804 805 811 814		ERJ3GEYJ103V	RESISTOR, 1/16W, 10KΩ	4
R 806 813 829 873 884		ERJ3GEYJ102V	RESISTOR, 1/16W, 1KΩ	5

REF. NO. and AREA		PART NO.	DESCRIPTION	Q'TY
R 807		ERJ3GEYJ562V	RESISTOR, 1/16W, 5.6KΩ	1
R 808 809		ERJ3GEYJ105V	RESISTOR, 1/16W, 1MΩ	2
R 810		ERJ3GEYJ472V	RESISTOR, 1/16W, 4.7KΩ	1
R 812		EFJ3GEYJ105V	RESISTOR, 1/16W, 1MΩ	1
R 815		ERJ3GEYJ562V	RESISTOR, 1/16W, 5.6KΩ	1
R 816 844 849 854 871		ERJ3GEYJ473V	RESISTOR, 1/16W, 47KΩ	5
R 818 819 820 869		ERJ3GEYJ101V	RESISTOR, 1/16W, 100Ω	4
R 824		DBJ8GF0R12VM	RESISTOR, 1/8W, 0.12Ω	1
R 825		DBJ14RR033VM	RESISTOR, 1/4W, 0.033Ω	1
R 827		ERJ3GEYJ471V	RESISTOR, 1/16W, 470Ω	1
R 828		ERJ3GEYJ4R7V	RESISTOR, 1/16W, 4.7Ω	1
R 830 870		ERJ3GEYJ222V	RESISTOR, 1/16W, 2.2KΩ	2
R 831 835 836 839 846 872 874 877 881 883		ERJ3GEY0R00V	RESISTOR, 1/16W, 0Ω	10
R 832		ERJ3GEYJ332V	RESISTOR, 1/16W, 3.3KΩ	2
R 833		ERA3YED201V	RESISTOR, 1/16W, 200Ω	1
R 834		ERA3YED201V	RESISTOR, 1/16W, 200Ω	1
R 837		ERA3EED4991V	RESISTOR, 1/16W, 4990Ω	1
R 838		DBJ14RR047VM	RESISTOR, 1/4W, 0.068Ω	1
R 840		ERA3YKD154V	RESISTOR, 1/16W, 150KΩ	1
R 841		ERA3YED333V	RESISTOR, 1/16W, 33KΩ	1
R 842		ERJ3GEYJ103V	RESISTOR, 1/16W, 10KΩ	1
R 843 853 885		ERJ3GEYJ474V	RESISTOR, 1/16W, 470KΩ	3
R 845		ERJ3GEYJ204V	RESISTOR, 1/16W, 200KΩ	1
R 847		ERJ3GEY0R00V	RESISTOR, 1/16W, 0Ω	1
R 848 855		ERJ3GEYJ473V	RESISTOR, 1/16W, 47KΩ	2
R 850 851		ERJ3GEYJ564V	RESISTOR, 1/4W, 560KΩ	2
R 852		ERJ3GEYJ474V	RESISTOR, 1/16W, 470KΩ	1
R 867 868		ERJ3GEYJ101V	RESISTOR, 1/16W, 100Ω	2
R 876		ERJ3GEYJ104V	RESISTOR, 1/16W, 100KΩ	1
RA 801		DEARA8AJ103M	RESISTOR ARRAY, 10KΩ	1
RA 802 803 804 805 806 807 808 809 810 812		EXBV8V330JV	RESISTOR ARRAY, 33Ω	10
RA 811		EXBV8V101JV	RESISTOR ARRAY, 100Ω	1
RA 813 814 815 816		EXBV8V330JV	RESISTOR ARRAY, 33Ω	4
RA 817		EXBV8V473JV	RESISTOR ARRAY, 47KΩ	1
SW 801		ESD165226	SW, SLIDE	1
PAD PCB				
C 707		DCUE1A106ZFL	CAPACITOR, 10V, 10μF	1
CN 701		DFJS514ZA012	CONNECTOR, FOR PAD-SUB	1
CN 703		DFJS514ZA012	CONNECTOR, FOR PAD	1
L 701 702		DDB5Z024E-L	FRRITE BEAD	2
L 703		DDB5Z005-L	FRRITE BEAD	1
R 712		ERJ6GEY0R00V	RESISTOR, 1/10W, 0Ω	1
SW 702		EVQPLDA15	SW, LEFT	1
SW 703		EVQPLDA15	SW, RIGHT	1
LID PCB				
CN 704		K1KA07B00075	CONNECTOR, FOR LID-SUB	1
LD 701 703		SEC1703C	LED	2
LD 702		SEC2764C	LED	1
R 701		ERJ3GEYJ821V	RESISTOR, 1/16W, 820Ω	1
R 702 703		ERJ3GEYJ331V	RESISTOR, 1/16W, 330Ω	2
SW 701		DFSE057ZA	SW, MAGNET	1

9.2. CD-ROM drive CF-VCD711

Replacement Parts List

(Main Block Unit, Mechanical Parts, Accessories and Packing Materrial)

Note: Important Safety Notice
Components identified by ⚠ mark have special characteristics important for safety.
When replacing any of these components, use only manufacturer's specified parts.

REF. NO. and AREA		PART NO.	DESCRIPTION		Q'TY
Main Block Unit					
E 1		DL3U11103AAA	PCB, CONNECTOR (A)	RTL	1
E 2		DL3U21103AAA	PCB, CONNECTOR (B)	RTL	1
E 3		DFJE50N035BH	FPC		1
E 4		N3DAA1A00002	DRIVE, SUPERDISK		1
Mechanical Parts					
K 1		DFKM0253XB-0	CABINET, TOP		1
K 2		DFGE0027YA	CHASSIS		1
K 3		DFMD3064YA	CLAMP, CD-ROM DRIVE		1
K 4		DFMX0561ZA	SHEET, INSULATION, CONNECTOR PCB		1
K 5		DFHE7007ZA	CD KEY		2
K 6	⚠	DFGT0671YA	RATING LABEL		1
K 7		DFHG1161ZA	SPACER, CONNECTOR (B)		1
K 8		DFMX0820ZA	SHEET, INSULATION, CD-ROM DRIVE		1
K 9		DFHG795ZA	SPACER		1
K 101		DFHE5067YA	SCREW		2
K 102		DXQT2+D25FNM	SCREW		2
K 103		DFHE5086ZA	SCREW		2
Connector (A)PCB					
CN 101		DFJS250YA160	CONNECTOR, EXPANSION BUS		1
CN 102		DFJS120ZA050	CONNECTOR, FOR CONNECTOR (B) PC		1
Connector (B) PC					
CN201		DFJS315ZA050	CONNECTOR, FOR DRIVE		1
CN202		DFJS120ZA050	CONNECTOR, FOR CONNECTOR (A) PCB		1

Refer to CF-VCD711 service manual.

9.3. SuperDisk drive CF-VFS712W

Replacement Parts List

(Main Block Unit, Mechanical Parts, Accessories and Packing Materrial)

Note: Important Safety Notice
Components identified by ⚠ mark have special characteristics important for safety.
When replacing any of these components, use only manufacturer's specified parts.

REF. NO. and AREA	PART NO.	DESCRIPTION		Q'TY
Main Block Unit				
E 1	DFWV48C0481	PCB, CONNECTOR (A)	RTL	1
E 2	DL3U10979BAA	PCB, CONNECTOR (B)	RTL	1
E 3	DFJE50N035BH	FPC		1
E 4	LKM-FC33-5AC	DRIVE, SUPERDISK		1
Mechanical Parts				
K 1	DFKM0253ZB-0	CABINET, TOP		1
K 2	DFGE0027ZA	CHASSIS		1
K 3	DFMD2113ZA	CLAMP, SUPERDISK DRIVE		2
K 4	DFMX0560ZA	SHEET, INSULATION, SUPERDISK DRIVE		1
K 5	DFMX0562ZA	SHEET, INSULATION, CONNECTOR PCB		1
K 6	DFDB0004XA	DAMPER		4
K 7	DFHE7007ZA	SD KEY		2
K 8 ⚠	DFGT0794ZA	RATING LABEL		1
K 9	XWG5	WASHER		4
K 101	XYN26+J5FN	SCREW		4
K 102	XTB26+6GFN	SCREW		4
Connector (A) PCB				
CN 101	DFJS250YA160	CONNECTOR, EXPANSION BUS		1
CN 102	DFJS120ZA050	CONNECTOR, FOR CONNECTOR (B) PCB		1
R 102 103	ERJ3GEY0R00V	RESISTOR, 1/16W, 0Ω		2
Connector (B) PCB				
CN202	DFJS120ZA050	CONNECTOR, FOR CONNECTOR (A) PCB		1
CN203	DFJS305ZA050	CONNECTOR, FOR DRIVE		1

Refer to CF-VFS712W service manual.

Printed Circuit Board

1. Main PCB <Top View>

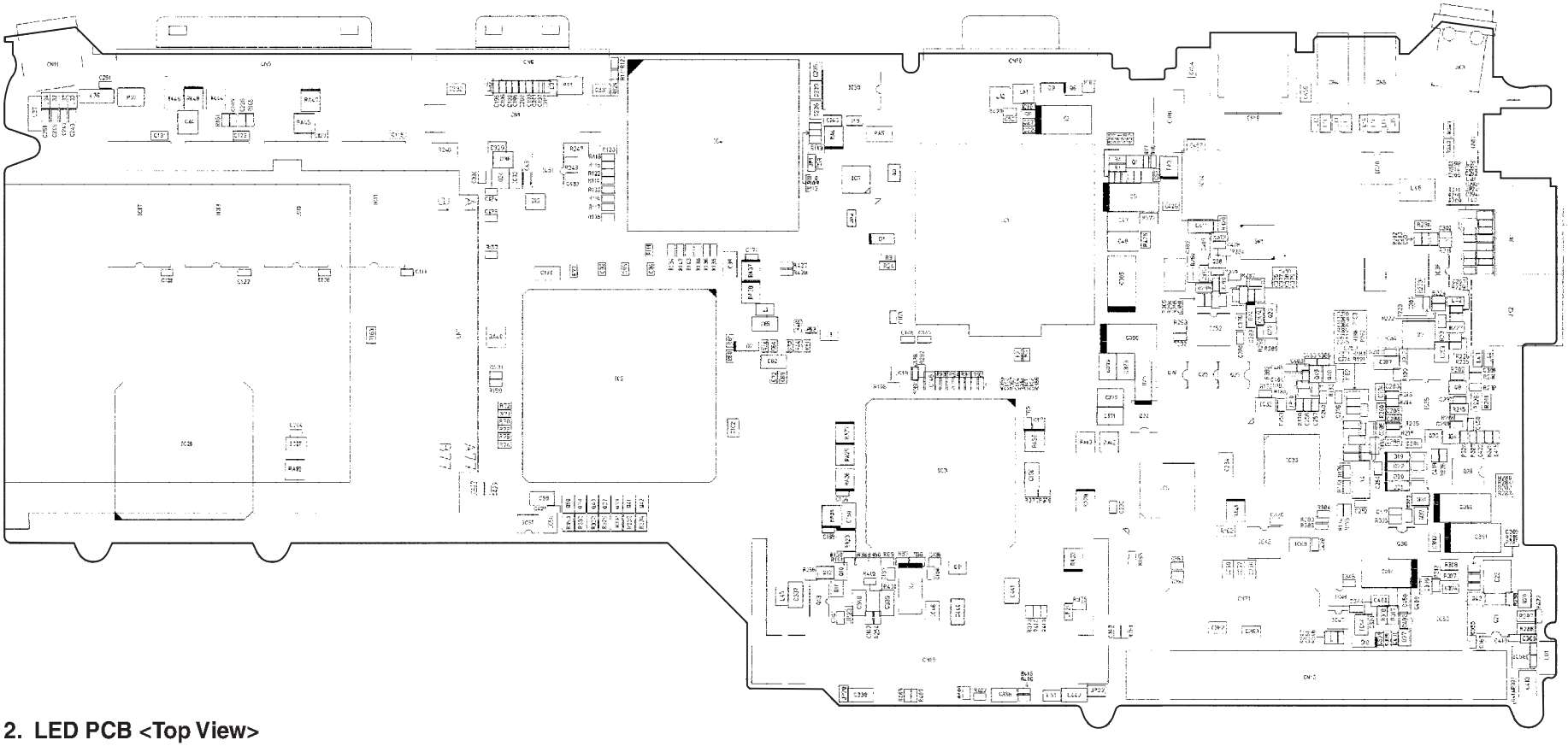

2. LED PCB <Top View>

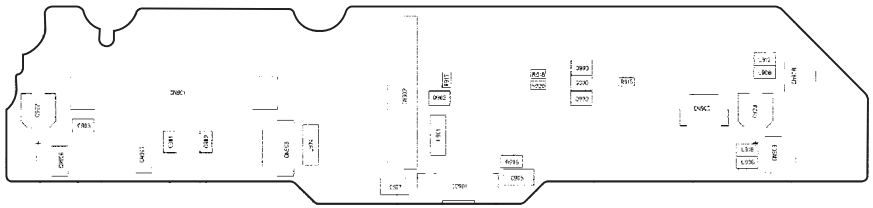

3. Main PCB <Bottom View>

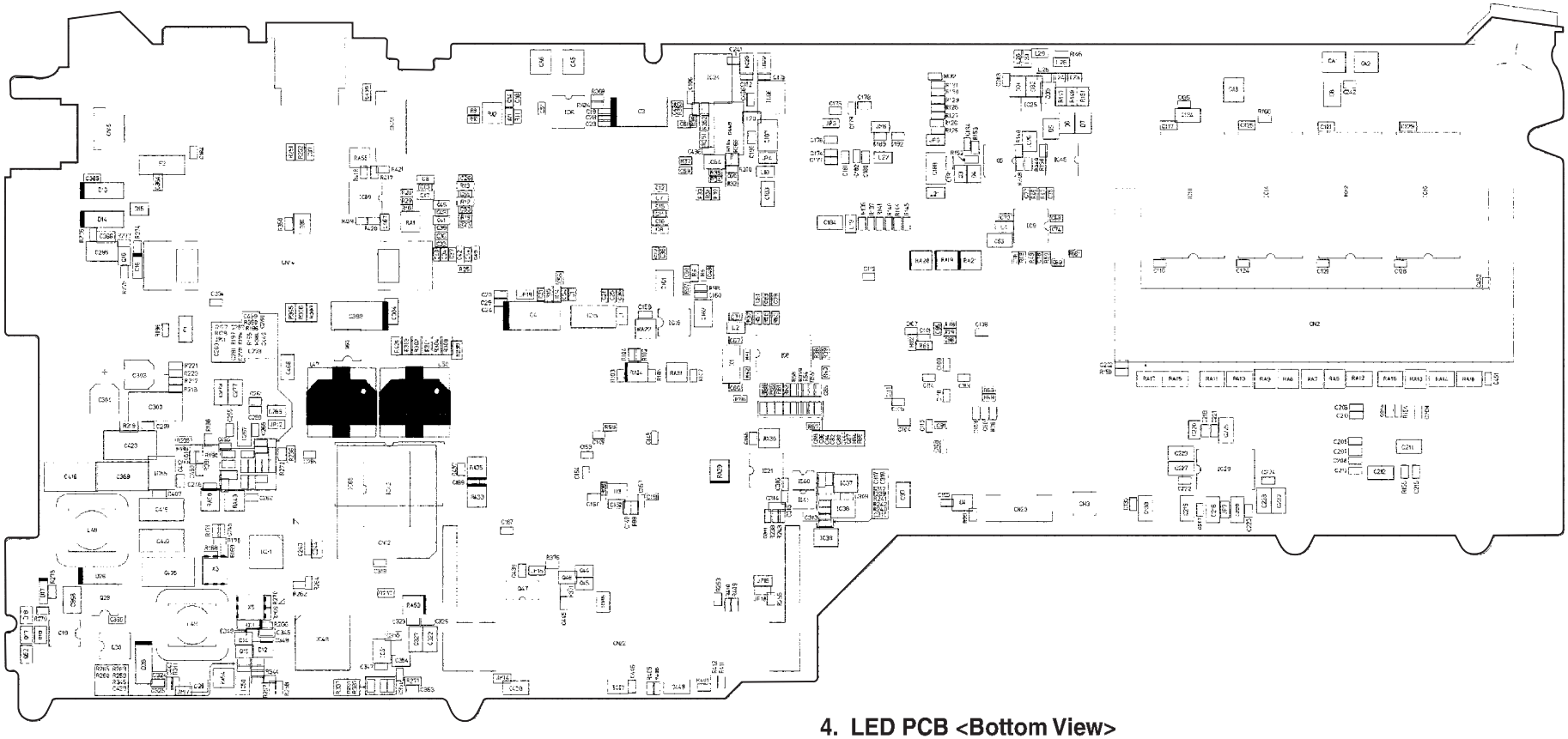

4. LED PCB <Bottom View>

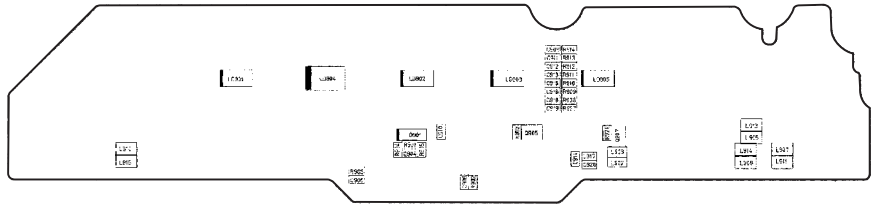

5. PAD PCB <Top View>

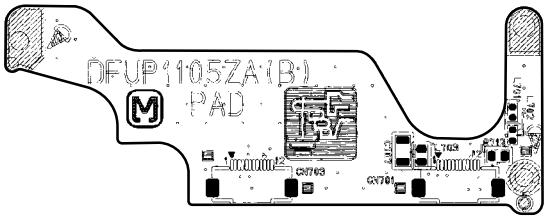

6. SUB PCB <Top View>

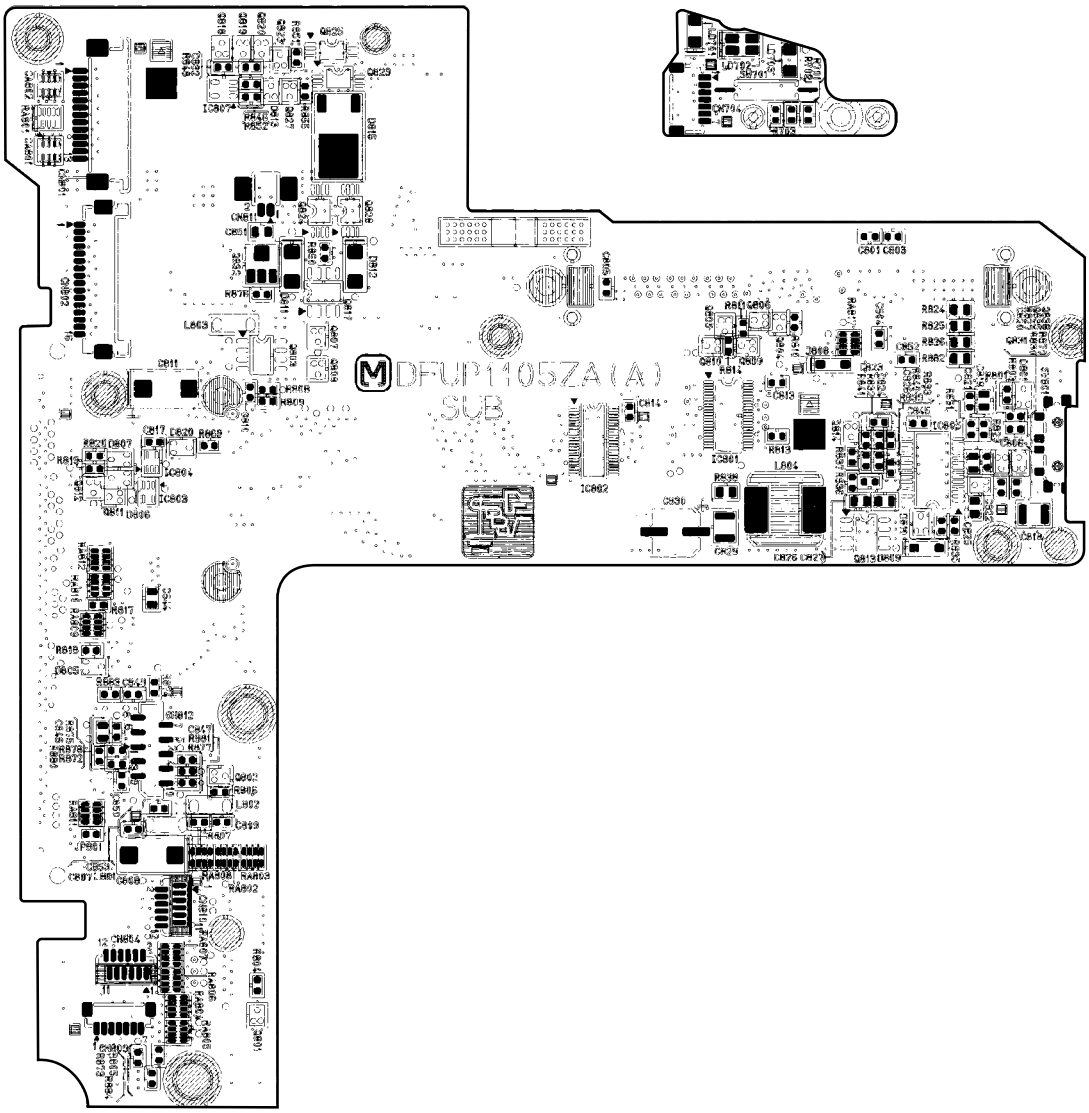

7. LID PCB <Top View>

8. PAD PCB <Bottom View>

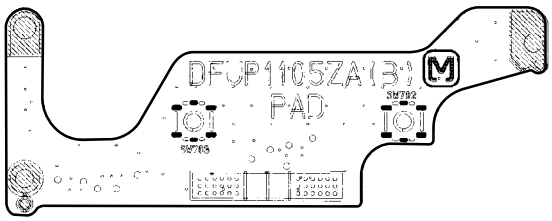

9. LID PCB <Bottom View>

10 SUB PCB <Bottom View>

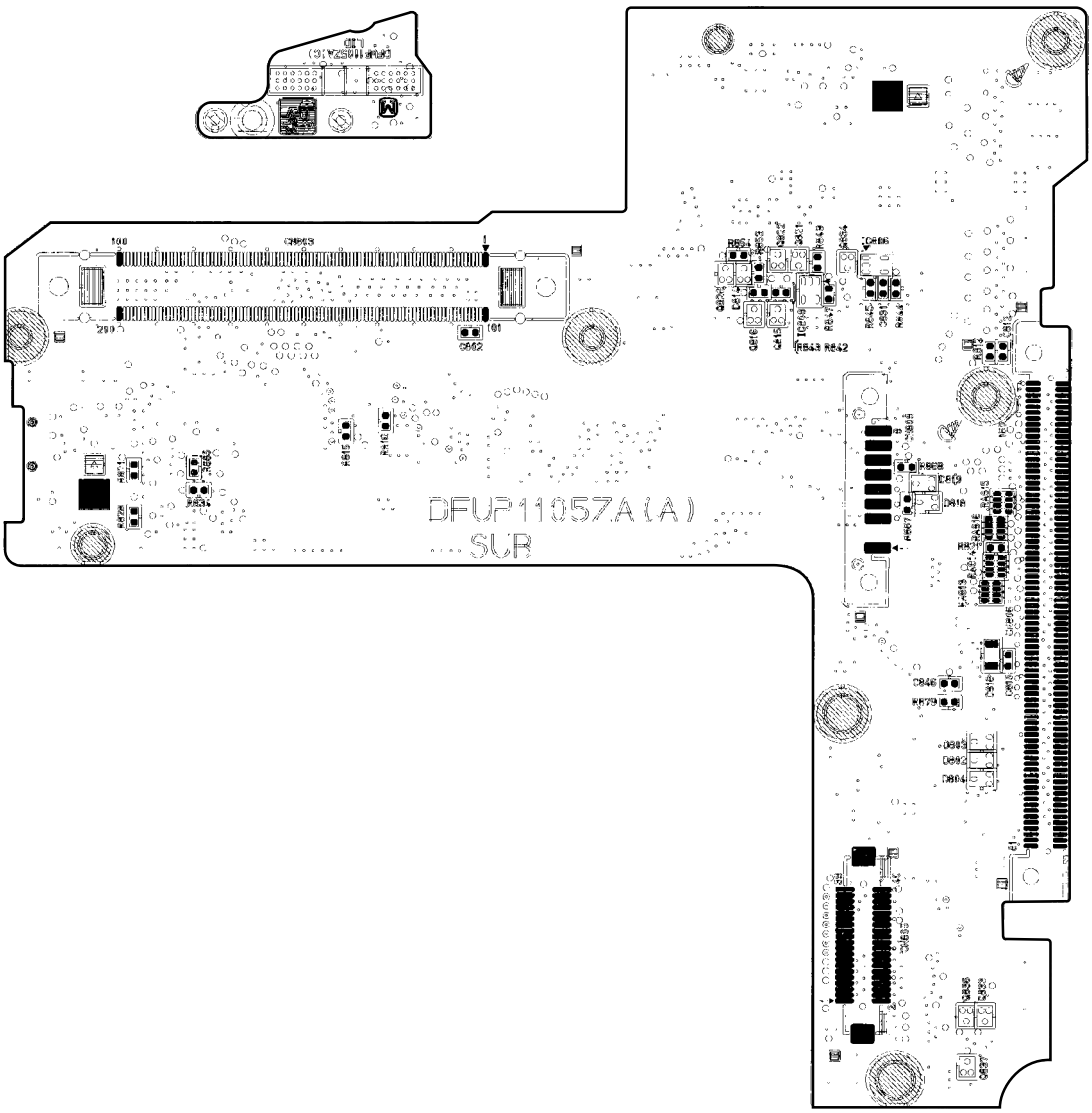

Shematic Diagrams

Main 1 CPU (1/2)

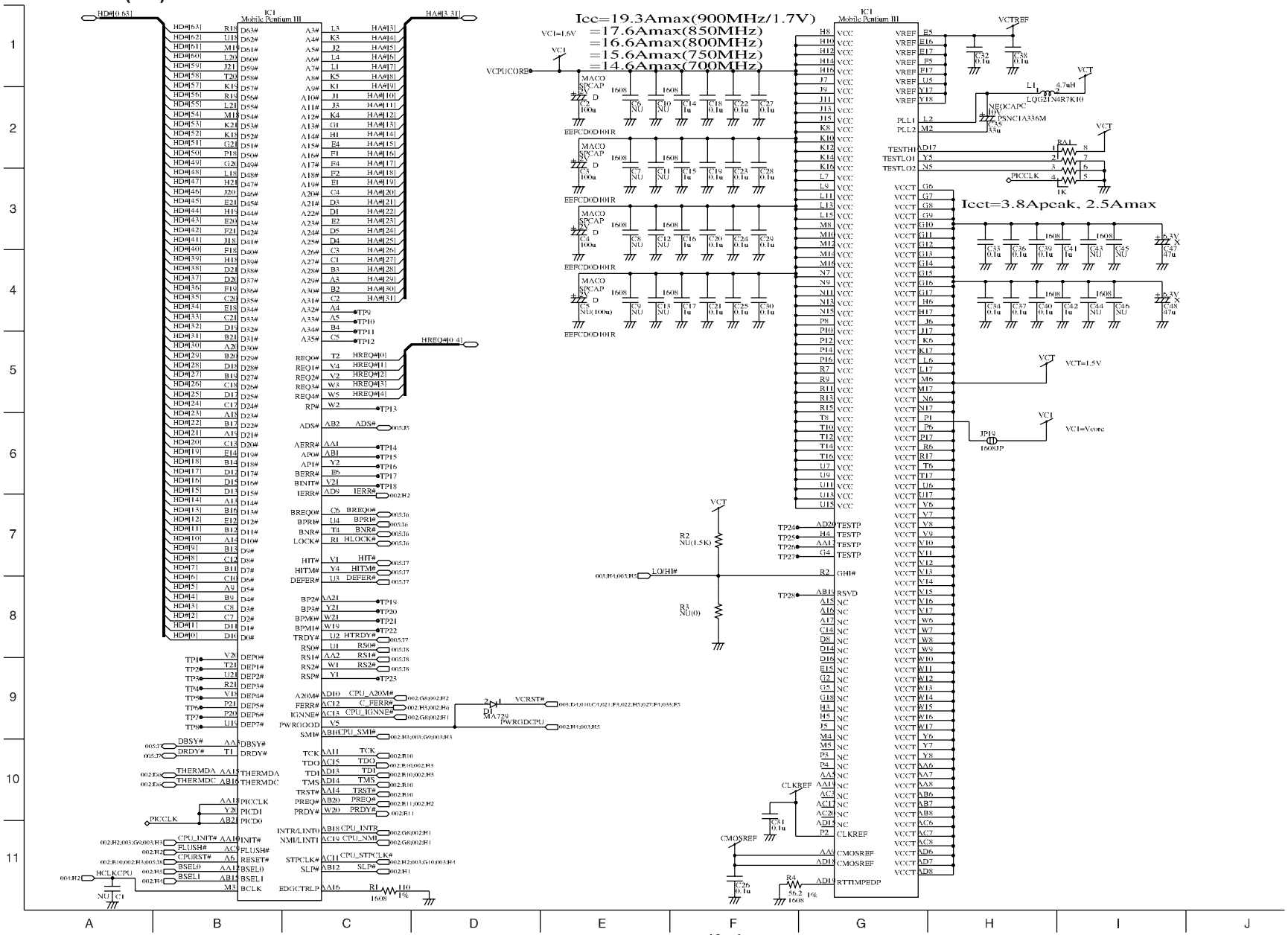

Main 2 CPU (2/2)

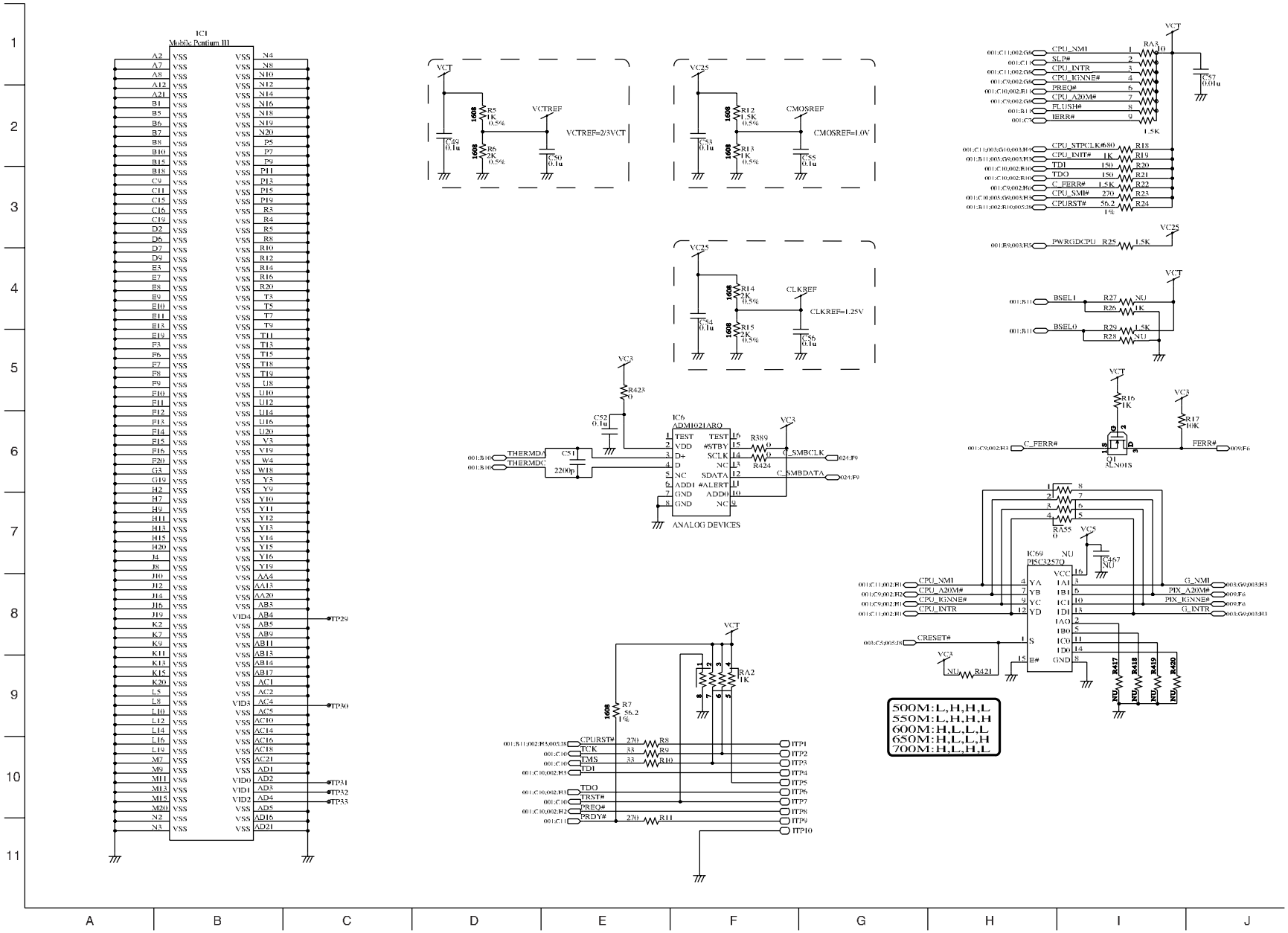
IC1
Mobile Pentium III
VCTREF=2/3VCT
CMOSREF=1.0V
CLKREF=1.25V
IC6
ADM1021ARQ
ANALOG DEVICES
IC69
PIS(C3257Q
500M:L,H,H,L
550M:L,H,H,H
600M:H,L,L,L
650M:H,L,L,H
700M:H,L,H,L

Main 3 GCL

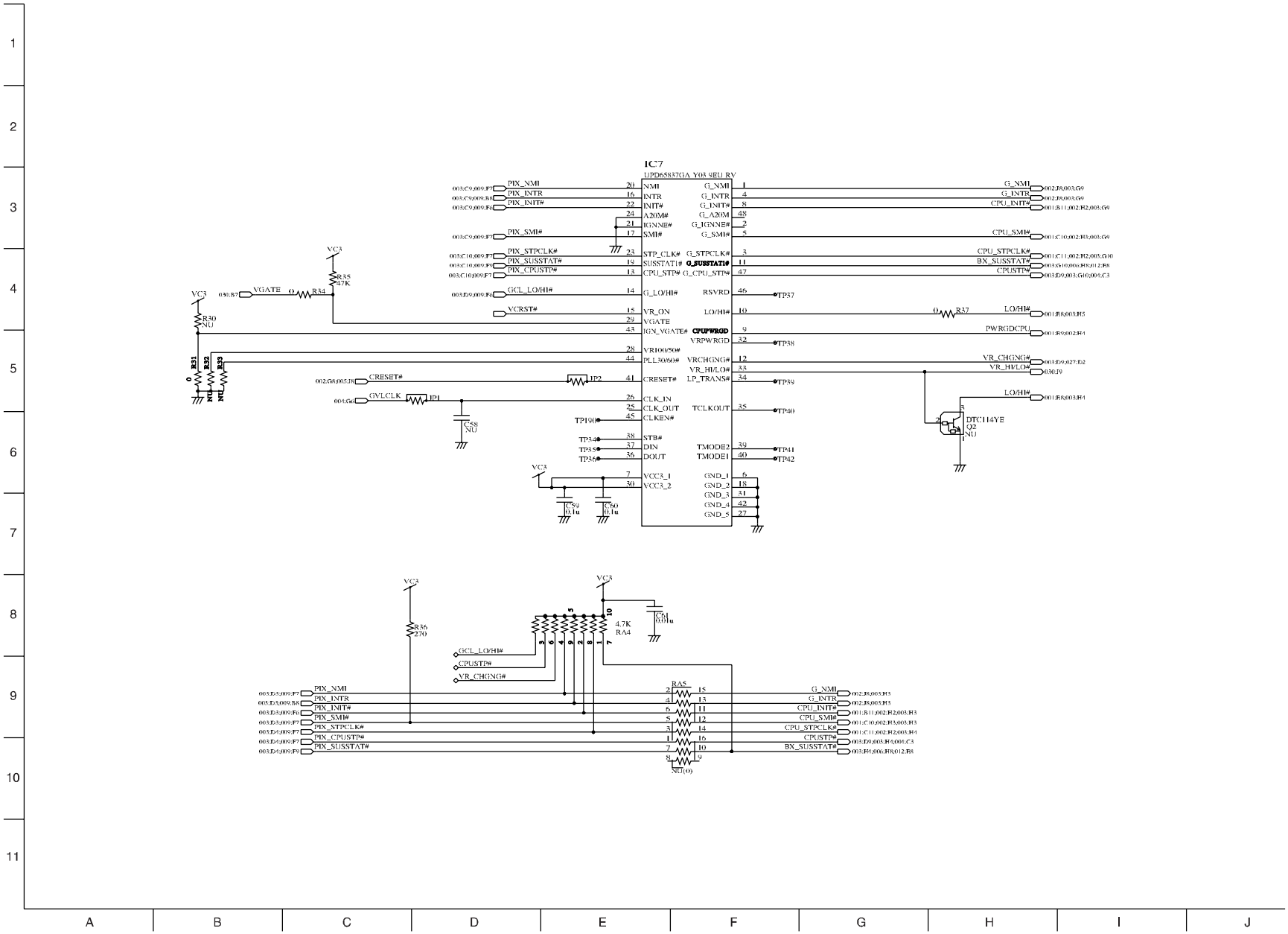
IC7
UPD65837GA-Y03-9EU-RV
PIX_NMI
PIX_INTR
PIX_INIT#
PIX_SMI#
PIX_STPCLK#
PIX_SUSSTAT#
PIX_CPUSTP#
GCL_LO/HI#
VCRST#
VGATE
CRESET#
GVLCLK
NMI
INTR
INIT#
A20M#
IGNNE#
SMI#
STP_CLK#
SUSSTAT1#
CPU_STP#
G_LO/HI#
VR_ON
VGATE
IGN_VGATE#
VRIO0/50#
PLL30/60#
CRESET#
CLK_IN
CLK_OUT
CLKEN#
STB#
DIN
DOUT
VCC3_1
VCC3_2
RSVRD
LO/HI#
CPUPWRGD
VRPWRGD
VRCHGNG#
VR_HI/LO#
LP_TRANS#
TCLKOUT
TMODE2
TMODE1
GND_1
GND_2
GND_3
GND_4
GND_5
G_NMI
G_INTR
G_INIT#
G_A20M
G_IGNNE#
G_SMI#
G_STPCLK#
G_SUSSTAT1#
G_CPU_STP#
CPU_INIT#
CPU_SMI#
CPU_STPCLK#
BX_SUSSTAT#
CPUSTP#
PWRGDCPU
VR_CHGNG#
VR_HI/LO#
R30 NU
R31 NU
R32 NU
R33 NU
R34 0
R35 47K
R37 0
JP1
JP2
C58 NU
C59 0.1u
C60 0.1u
TP37
TP38
TP39
TP40
TP41
TP42
TP190
DTC114YE
Q2 NU
R36 270
4.7K RA4
C61 0.01u
RA5
NU(0)
VC3

Main 4 CLOCK

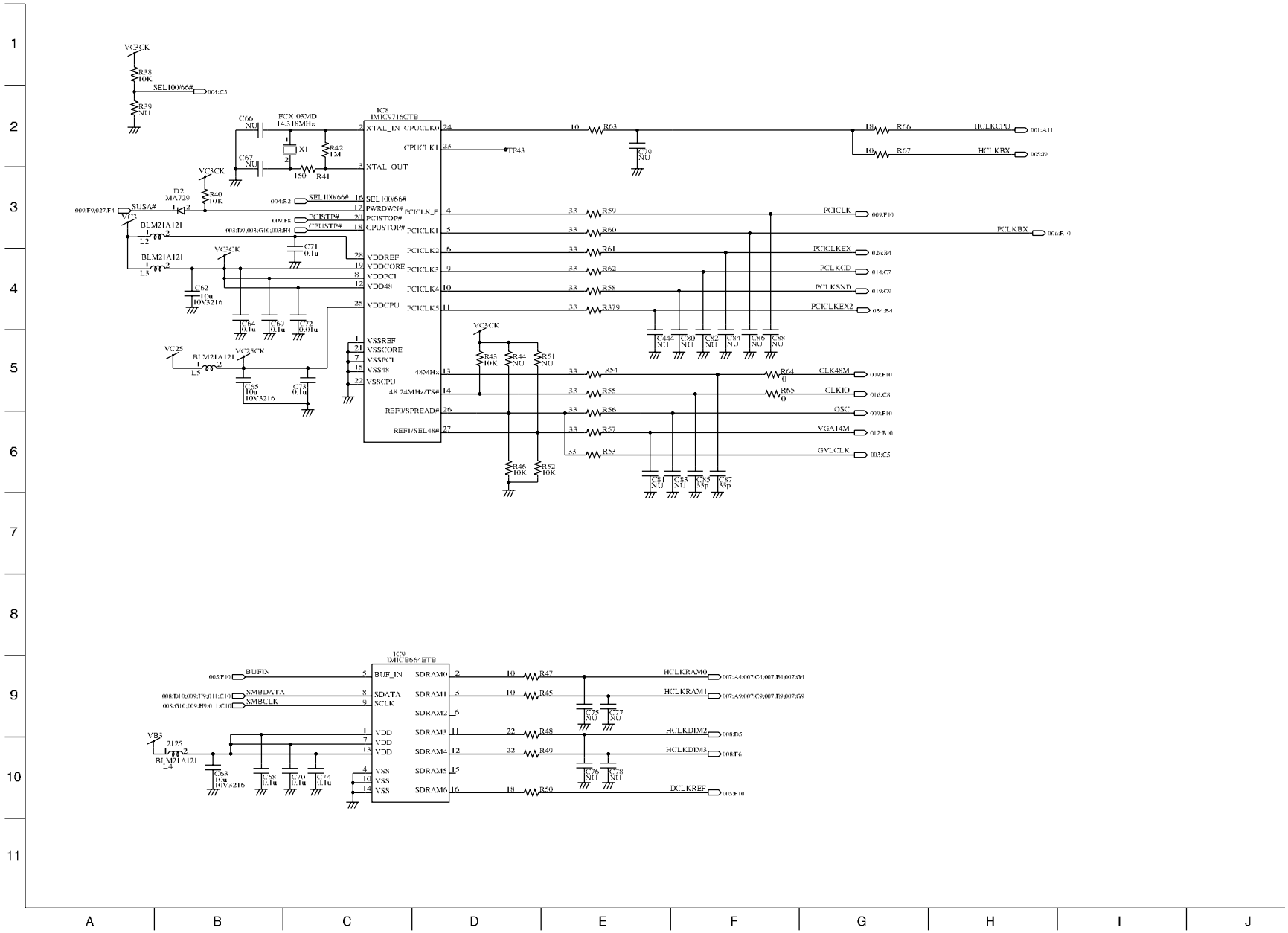
IC8
IMC9716CTB
XTAL_IN
XTAL_OUT
CPUCLK0
CPUCLK1
SEL100/66#
PWRDWN#
PCISTOP#
CPUSTOP#
PCICLK_F
PCICLK1
PCICLK2
PCICLK3
PCICLK4
PCICLK5
VDDREF
VDDCORE
VDDPCI
VDD48
VDDCPU
VSSREF
VSSCORE
VSSPCI
VSS48
VSSCPU
48MHz
48 24MHz/TS#
REF0/SPREAD#
REF1/SEL48#
HCLKCPU
HCLKBX
PCICLK
PCLKBX
PCICLKEX
PCLKCD
PCLKSND
PCICLKEX2
CLK48M
CLKIO
OSC
VGA14M
GVLCLK
IC9
IMC9664ETB
BUF_IN
SDATA
SCLK
VDD
VSS
SDRAM0
SDRAM1
SDRAM2
SDRAM3
SDRAM4
SDRAM5
SDRAM6
HCLKRAM0
HCLKRAM1
HCLKDIM2
HCLKDIM3
DCLKREF

Main 5 443BX (1/2)

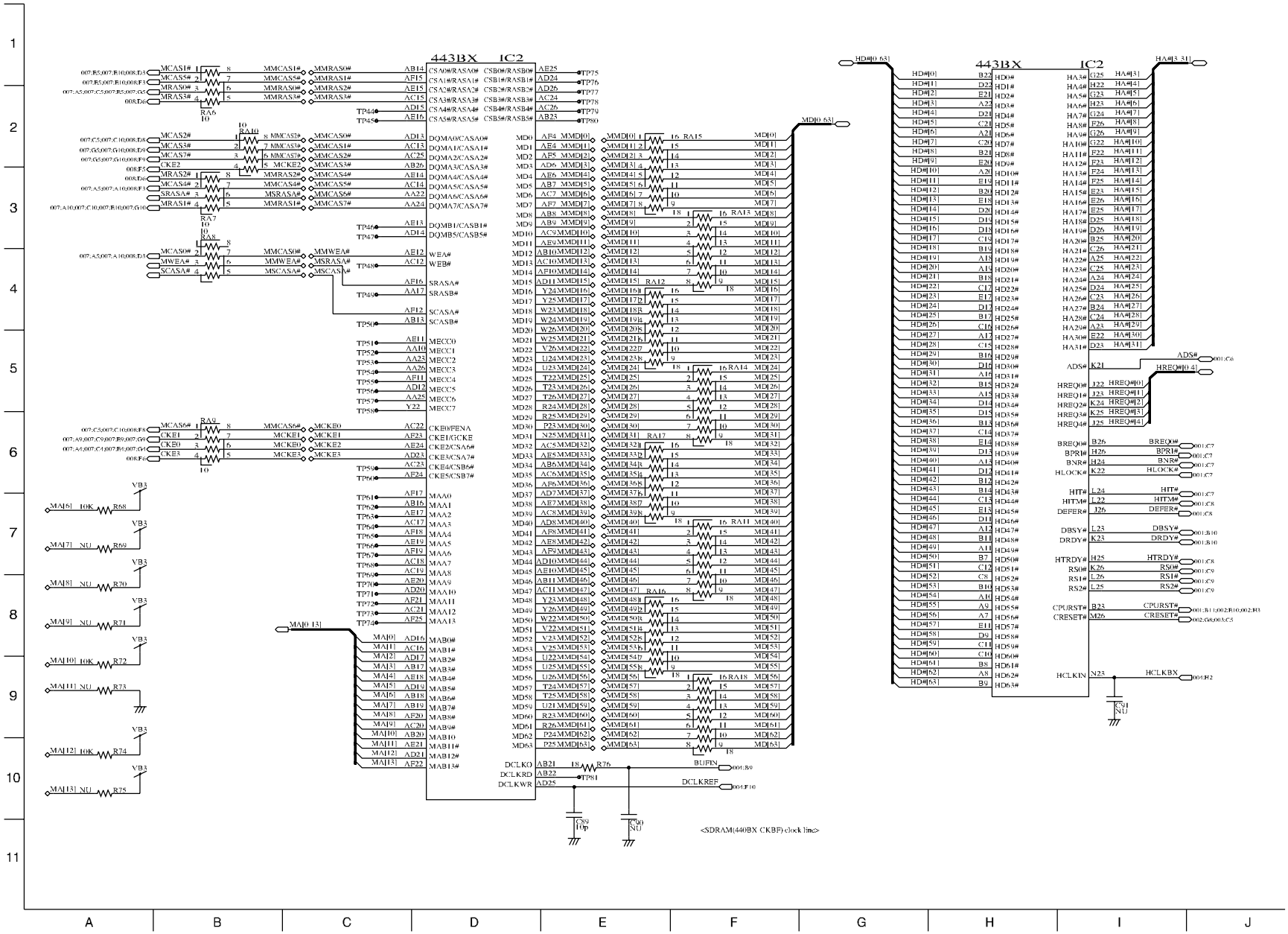

Main 6 443BX (2/2)

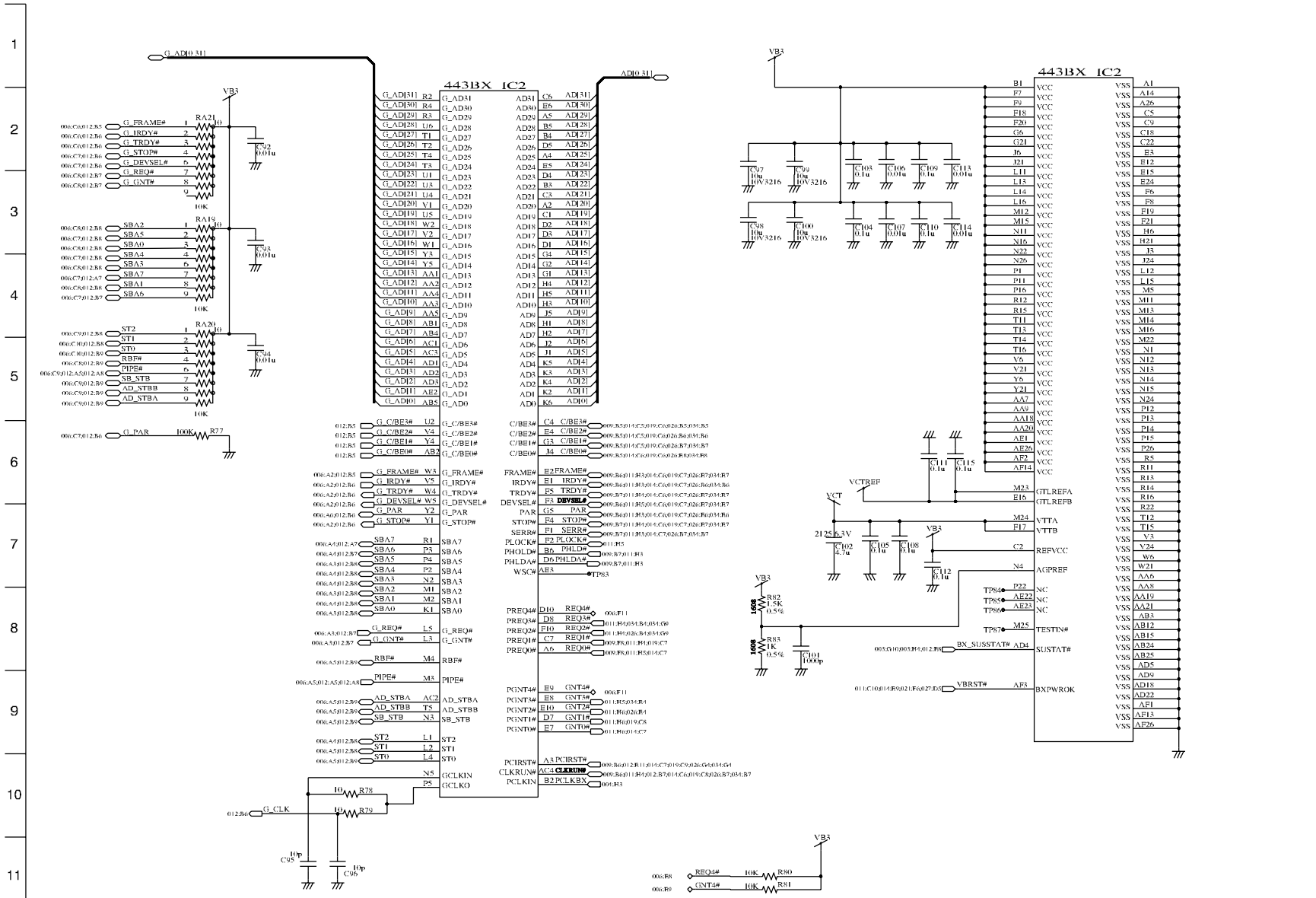

Main 7 ON-BOARD MEMORY (RAM)

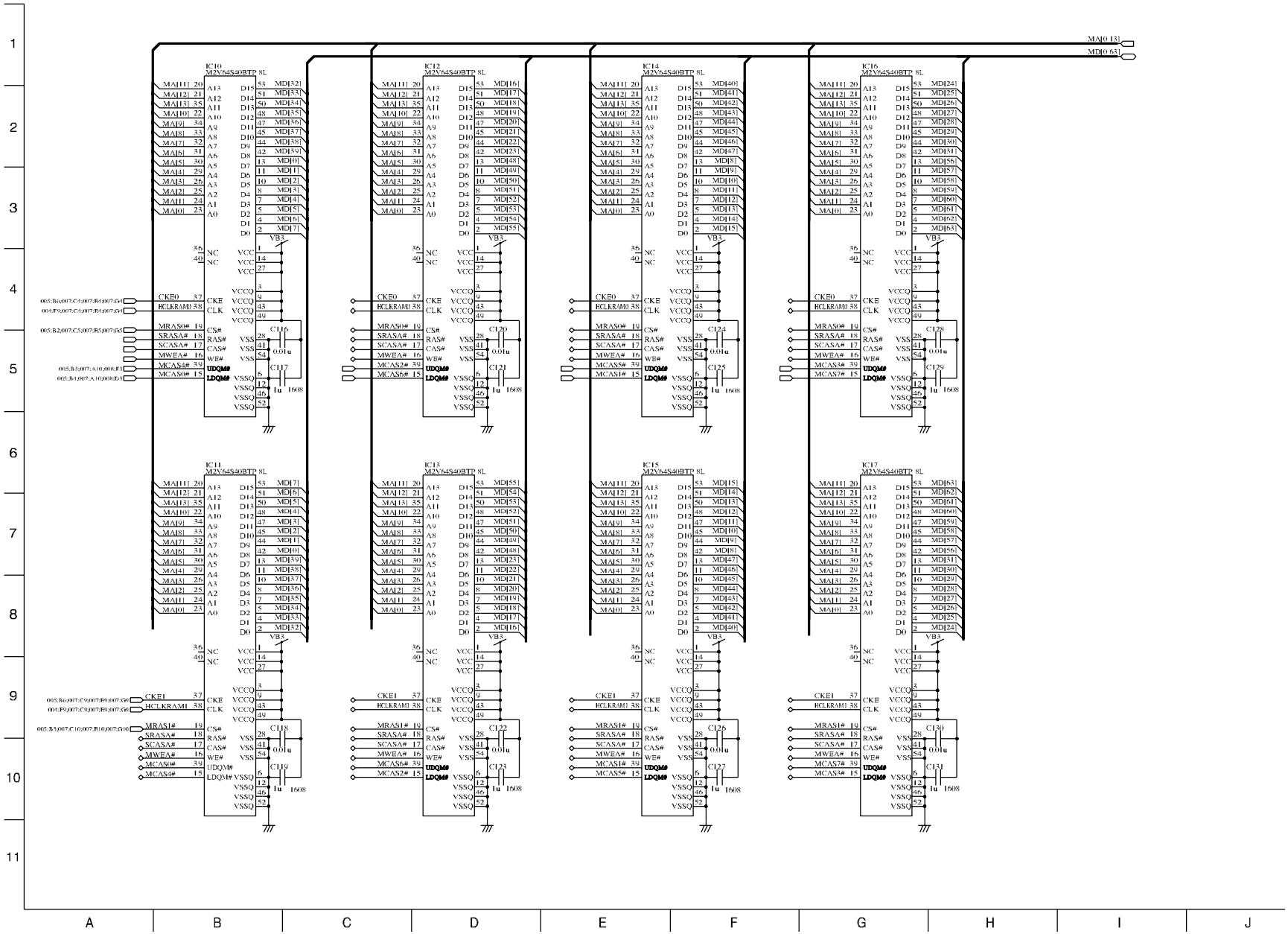

Main 8 SO-DIMM

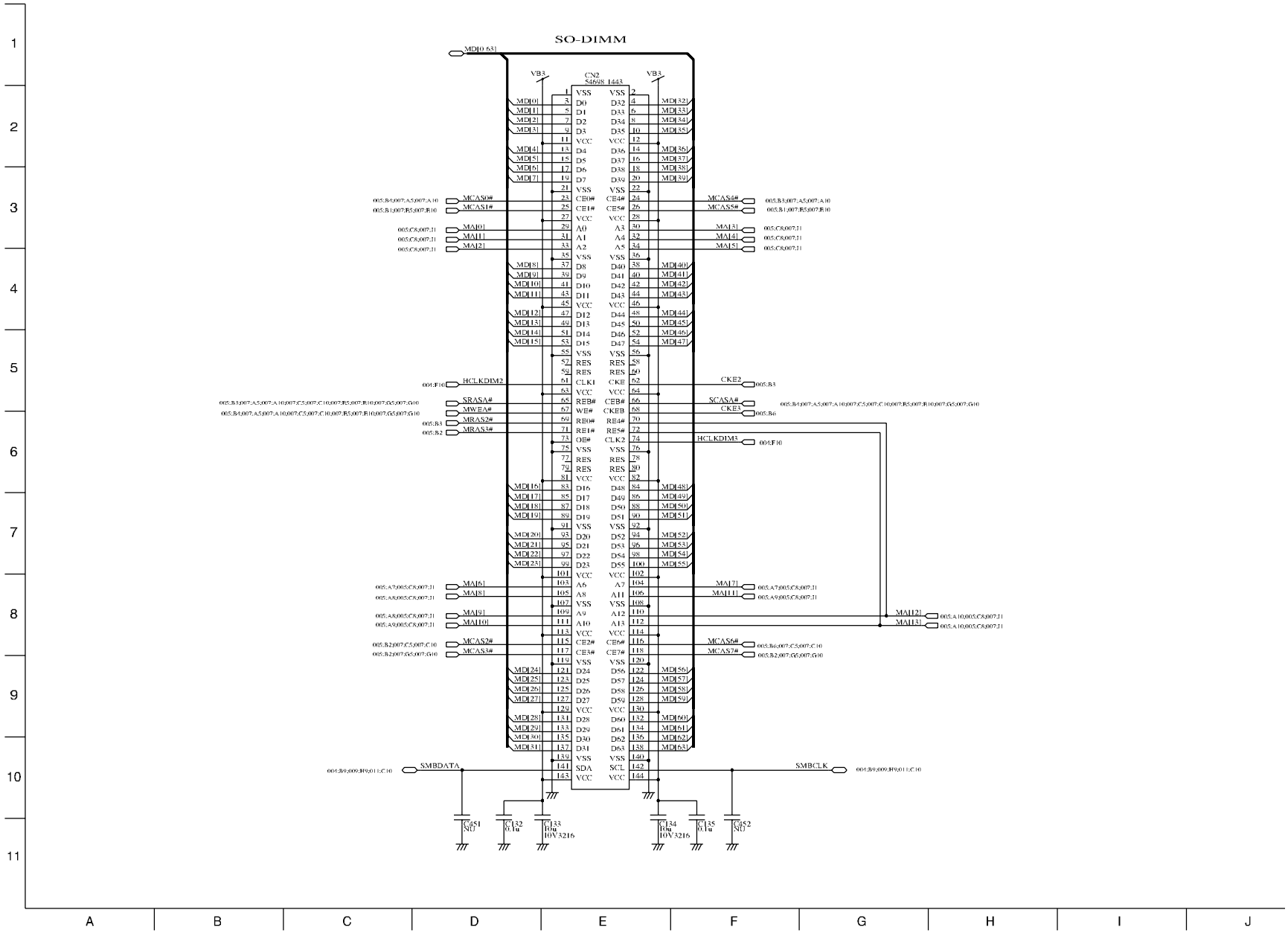

Main 9 PIIX4M (1/2)

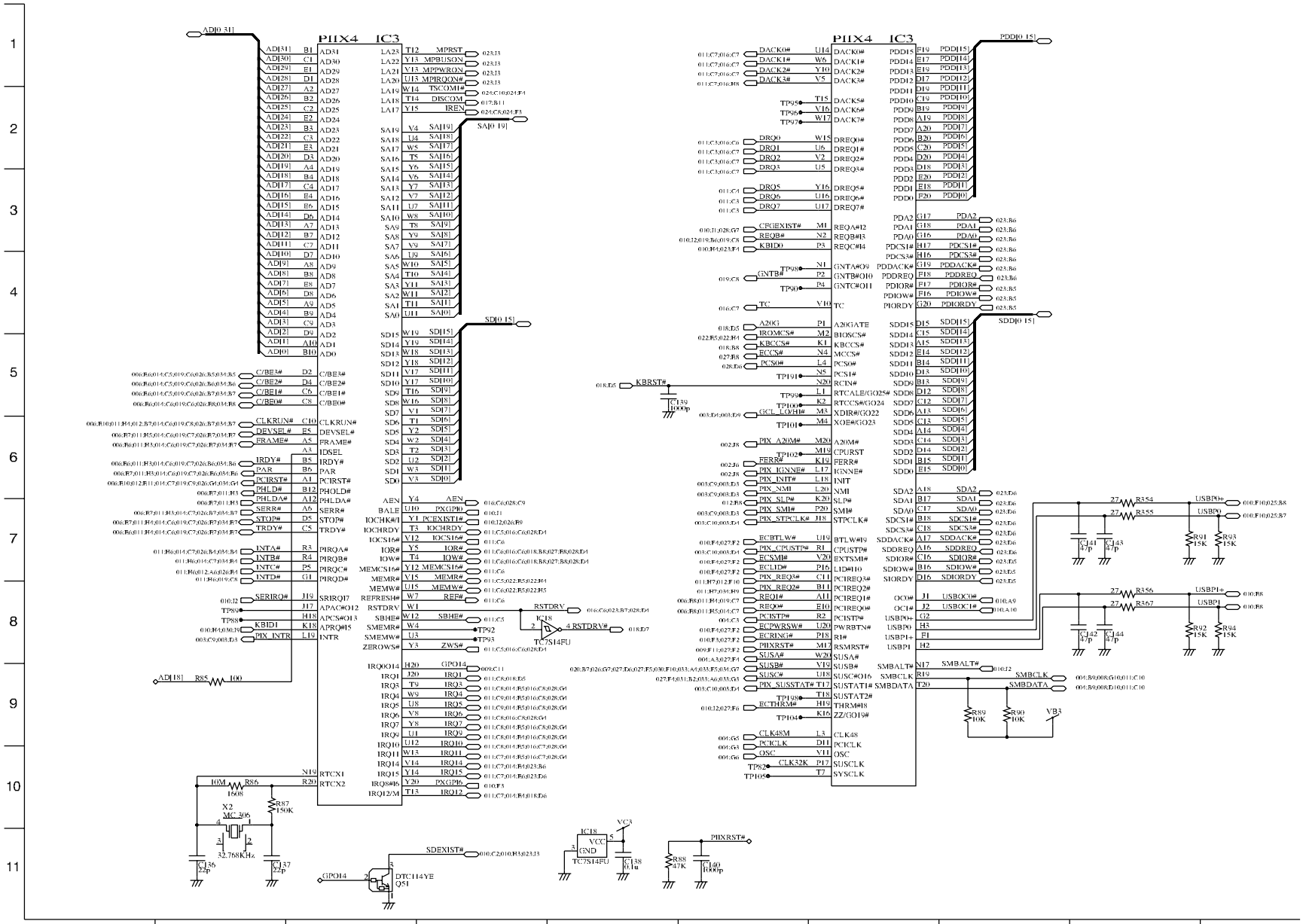

Main 10 PIIX4M (2/2)

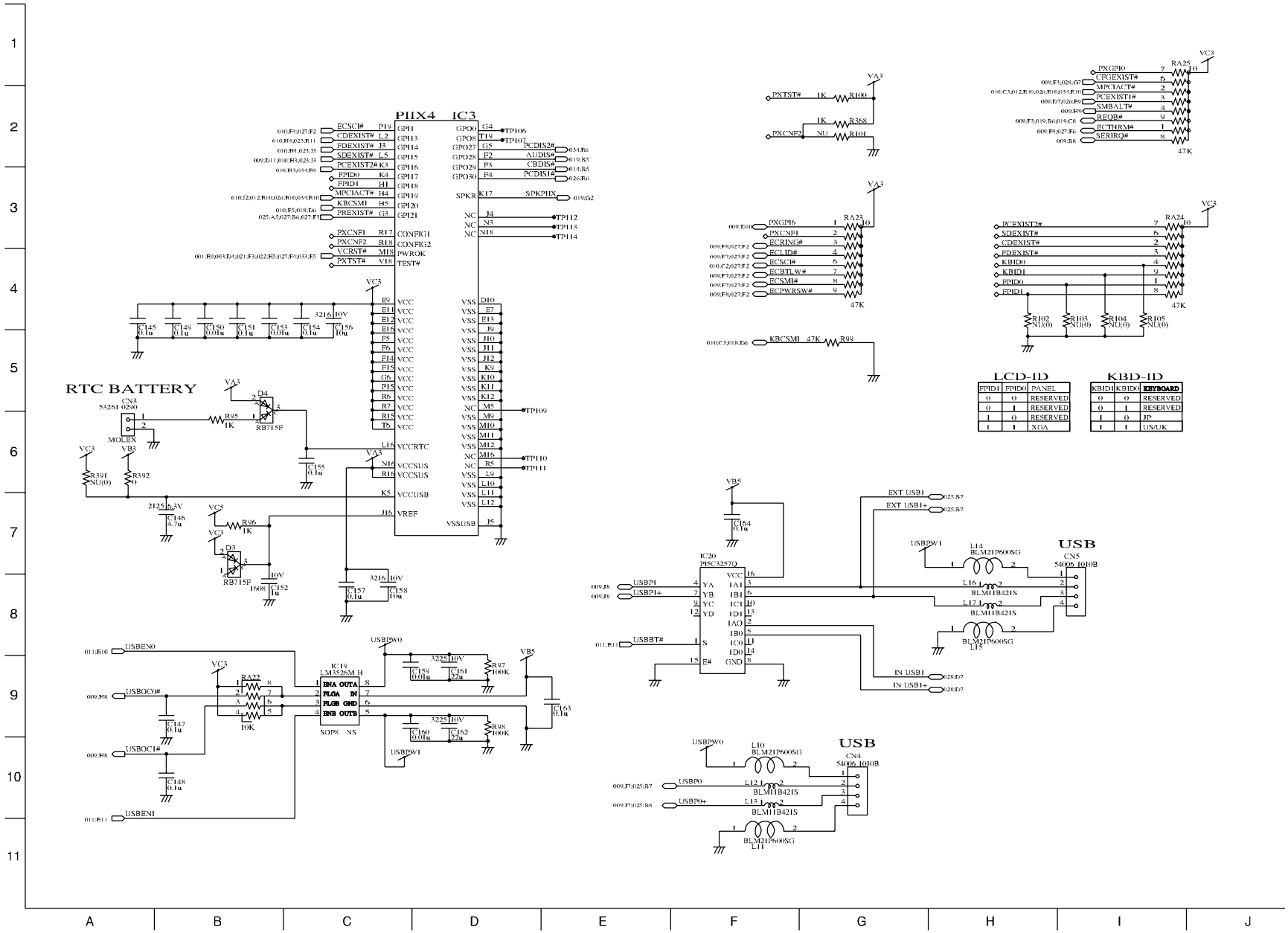

FPID1	FPID0	PANEL
0	0	RESERVED
0	1	RESERVED
1	0	RESERVED
1	1	XGA

KBID1	KBID0	KEYBOARD
0	0	RESERVED
0	1	RESERVED
1	0	JP
1	1	US/UK

Main 11 TERMINATOR

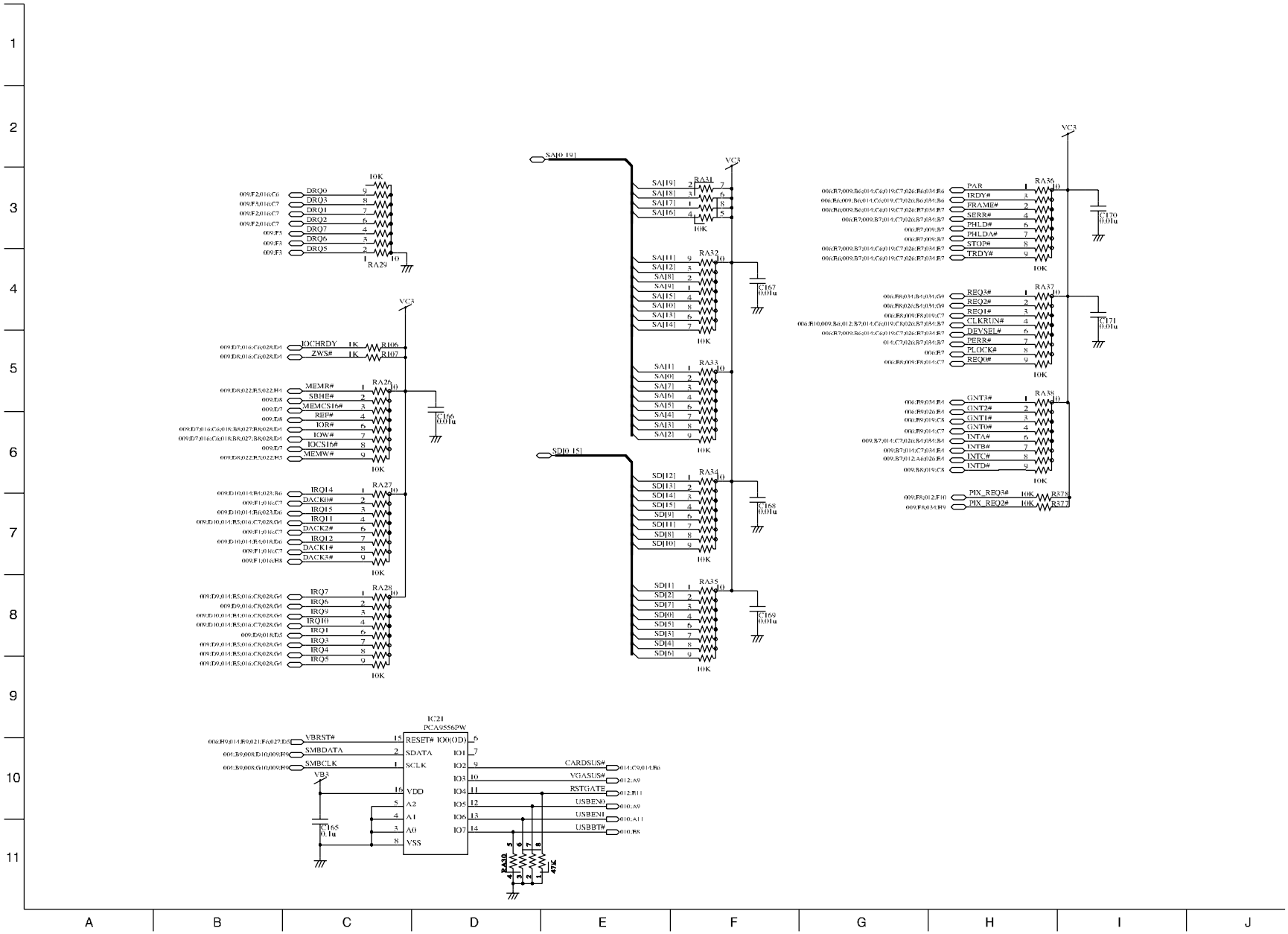

Main 12 VGA

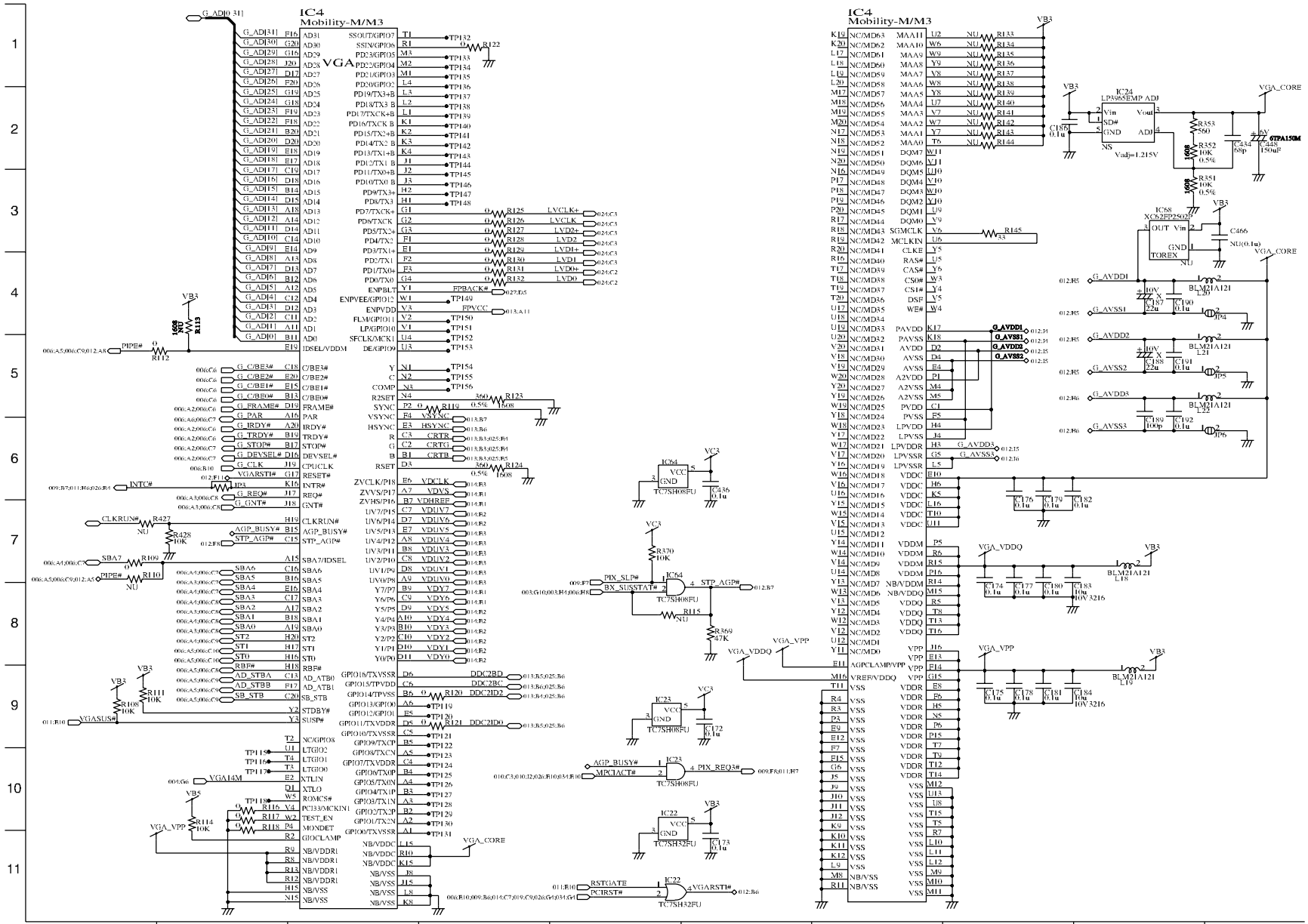
IC4
Mobility-M/M3
VGA
IC24
LP3965EMP ADJ
IC68
XC62FP2502
IC64
TC7SH08FU
IC23
TC7SH08FU
IC22
TC7SH32FU
VGA_CORE
VGA_VDDQ
VGA_VPP
VB3
VC3
VB5

Main 13 LCD&CRT CN

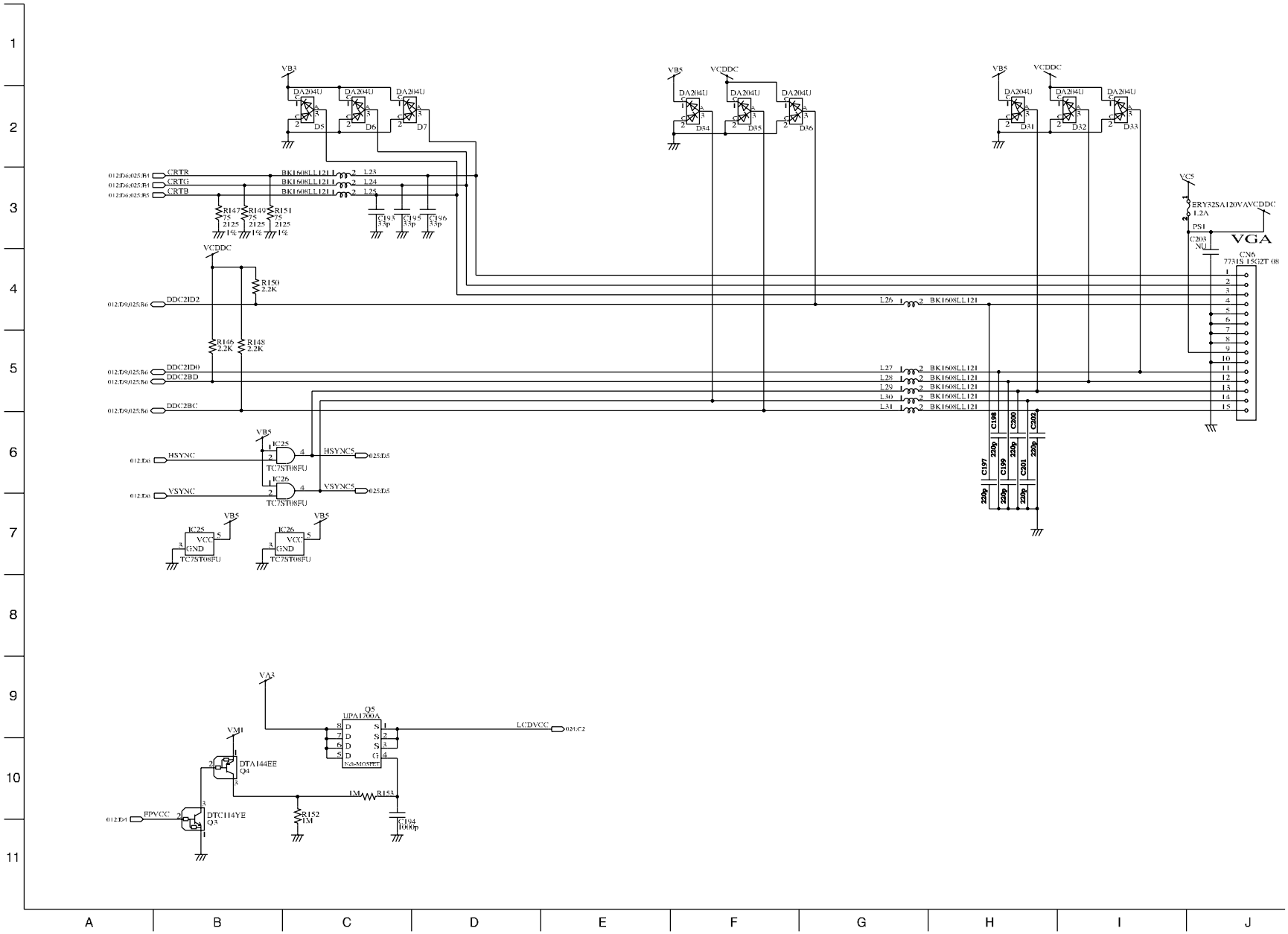

Main 14 CB

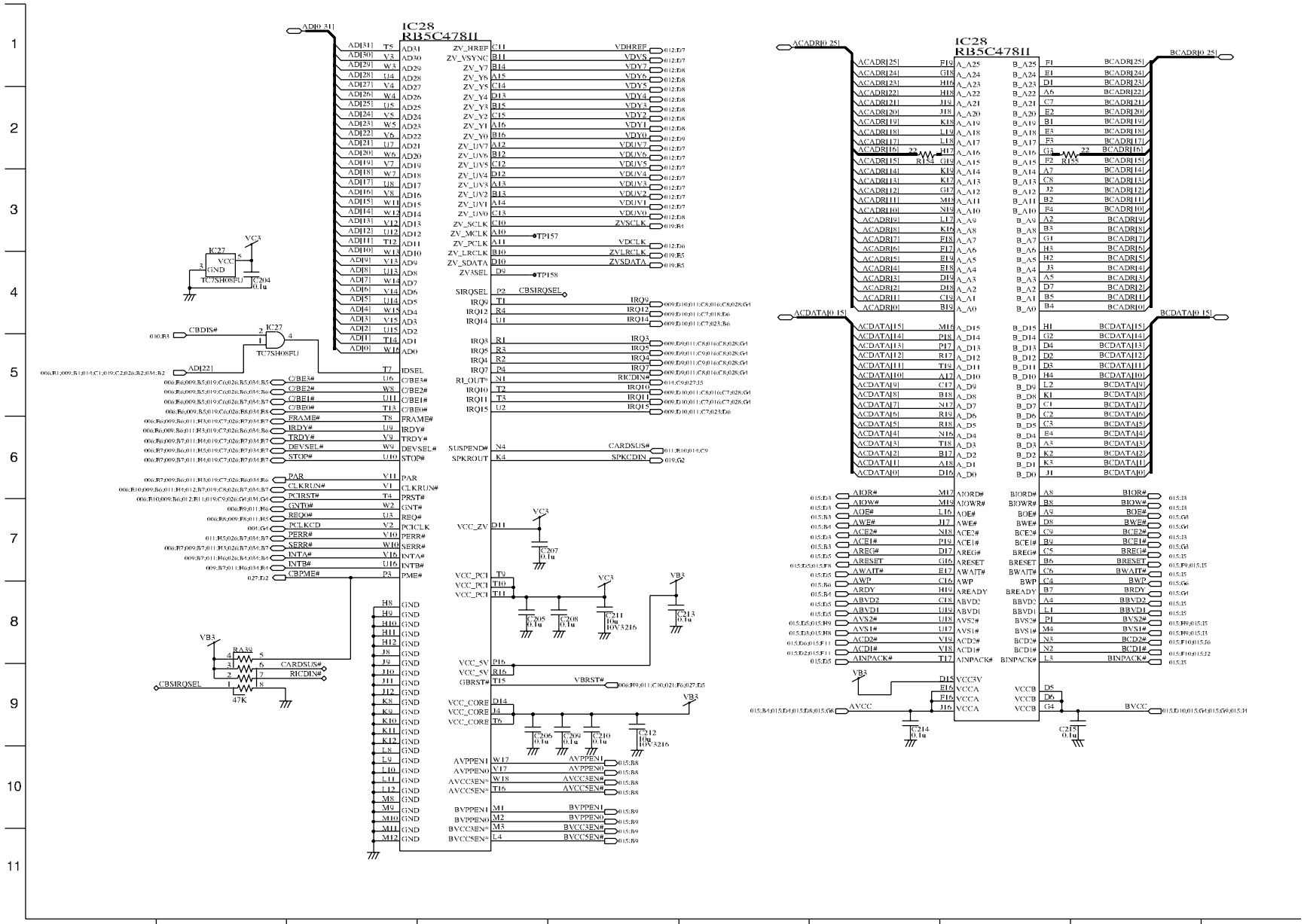

IC28
RB5C478II
IC28
RB5C478II
IC27
TC7SH08FU
IC27
TC7SH08FU
RA39
47K
VC3
VB3
VC3
VB3
VB3
VC3
VB3
VB3
TP157
TP158
CBSIRQSEL
CBDIS#
CARDSUS#
RICDIN#
CBSIRQSEL
AVCC
BVCC

Main 15 CB CN

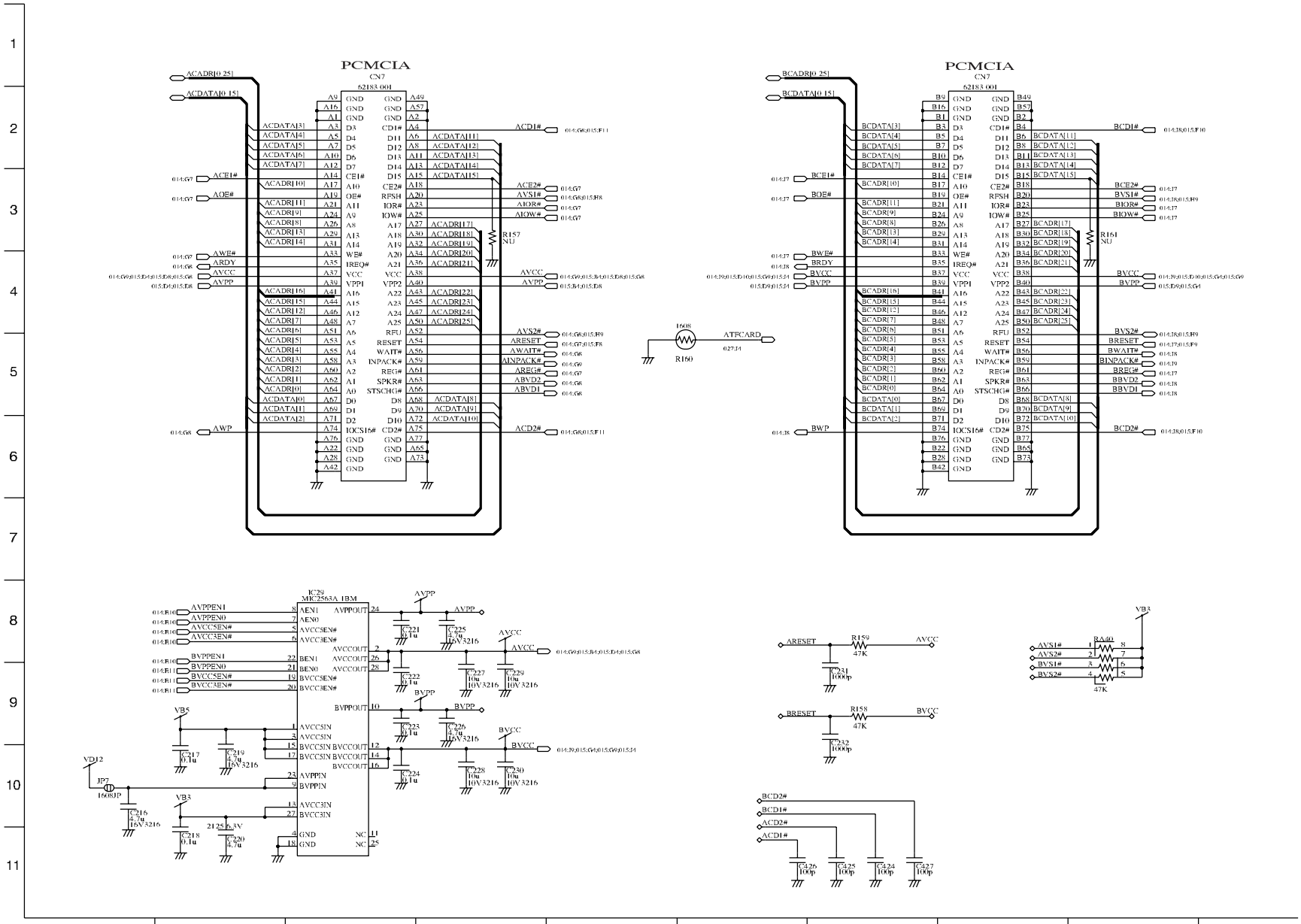

PCMCIA
CN7
62183-001
PCMCIA
CN7
62183-001
IC29
MIC2563A-1BM
R157
NU
R161
NU
R160
1608
ATFCARD
R159
47K
R158
47K
RA40
47K
JP7
1608JP

Main 16 SUPER I/O

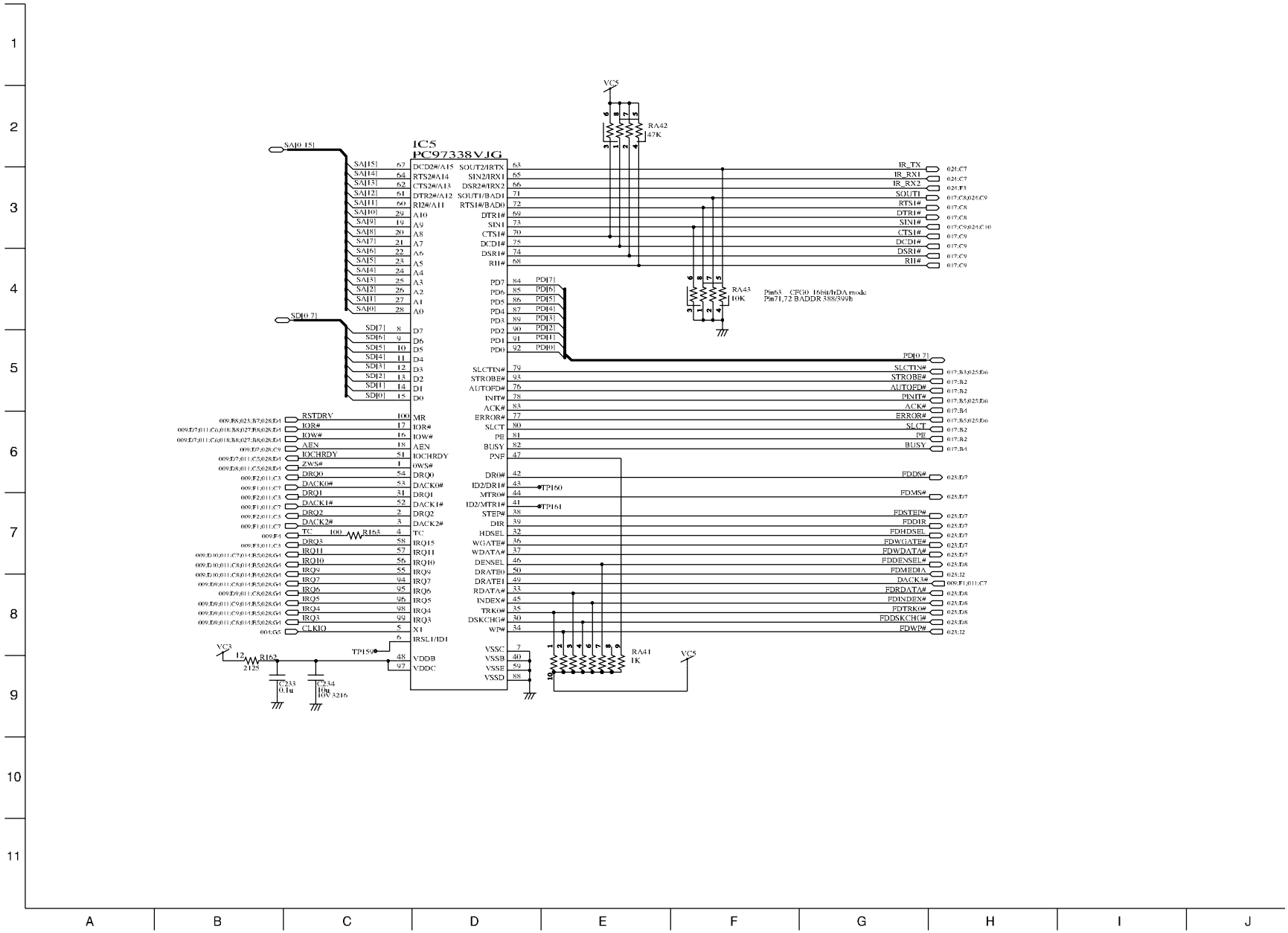

Main 17 LPT&COM CN

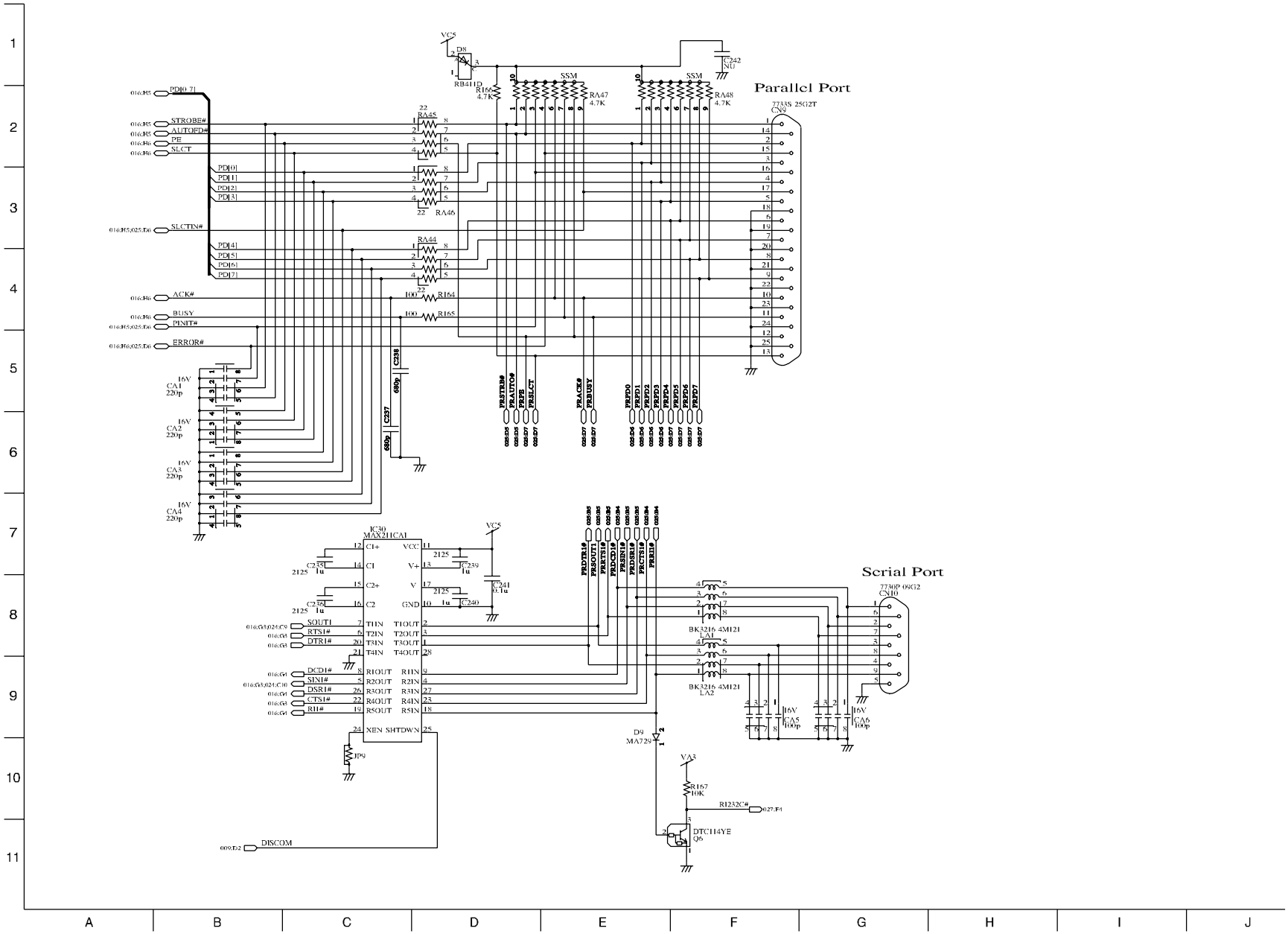

Main 18 KBC

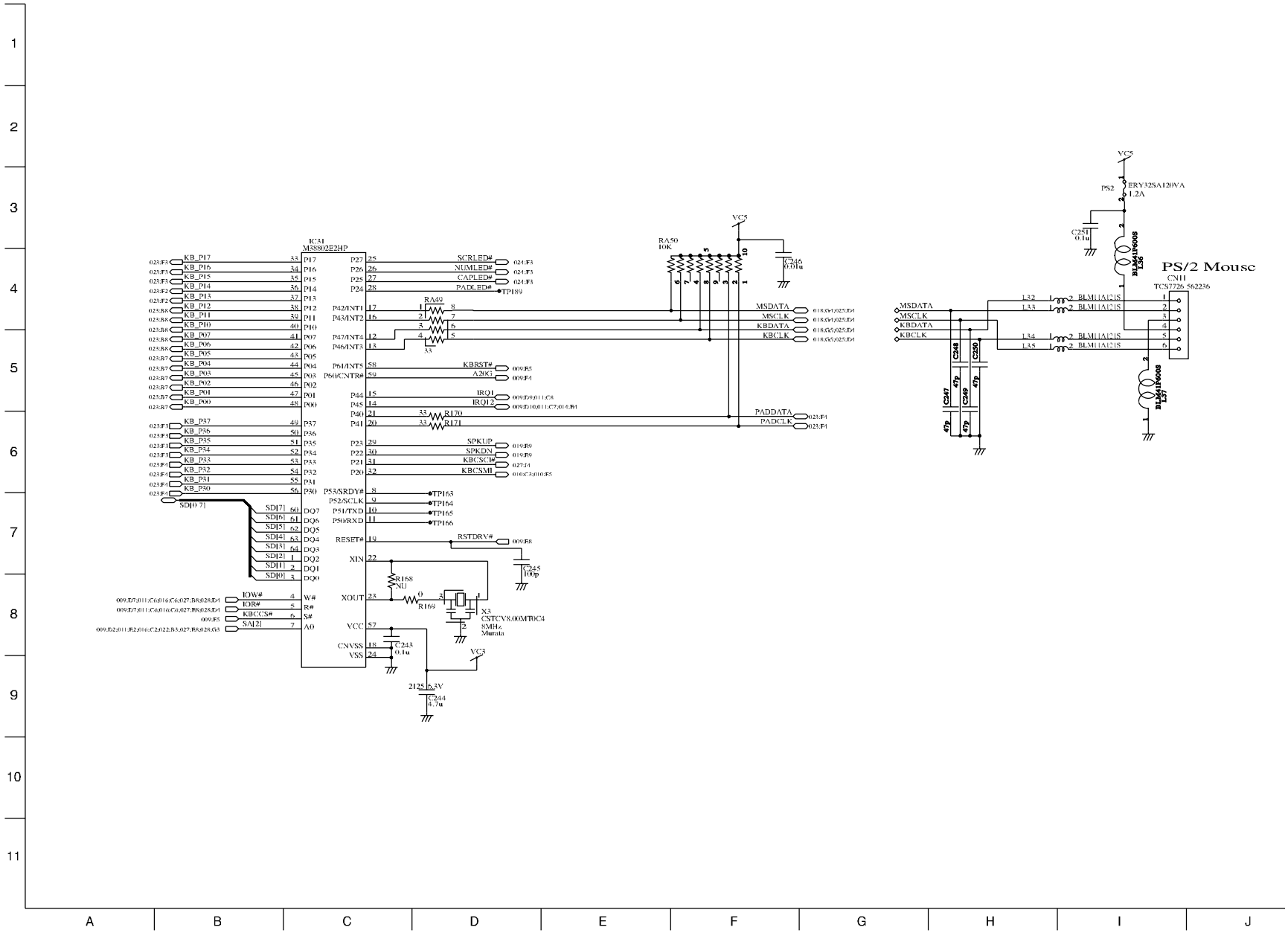
IC31
M38802E2HP
RA50
10K
VC5
C246
0.01u
SCRLED#
NUMLED#
CAPLED#
PADLED#
TP189
RA49
MSDATA
MSCLK
KBDATA
KBCLK
KBRST#
A20K1
IRQ1
IRQ12
R170
R171
PADDATA
PADCLK
SPKUP
SPKDN
KBCSCI#
KBCSMI
TP163
TP164
TP165
TP166
RSTDRV#
C245
100p
R168
NU
R169
X3
CSTCV8.00MT0C4
8MHz
Murata
C243
0.1u
VC3
C244
4.7u
PS2
ERY32SA120VA
1.2A
C251
0.1u
BLM41P600S
L36
L37
PS/2 Mouse
CN11
TCS7726 562236
BLM11A121S
C247
C248
C249
C250
47p

Main 19 SOUND IC

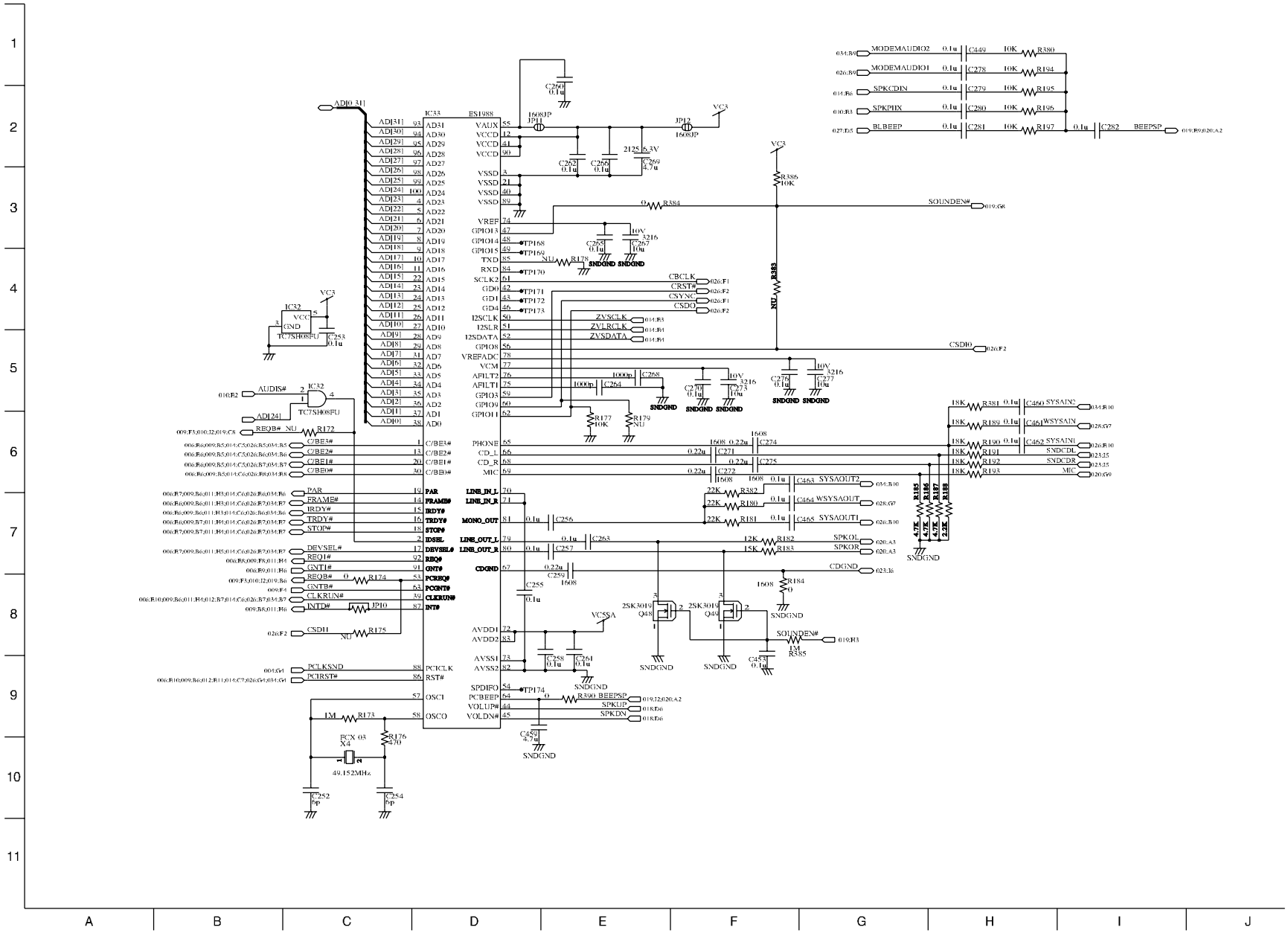

Main 20 SOUND AMP

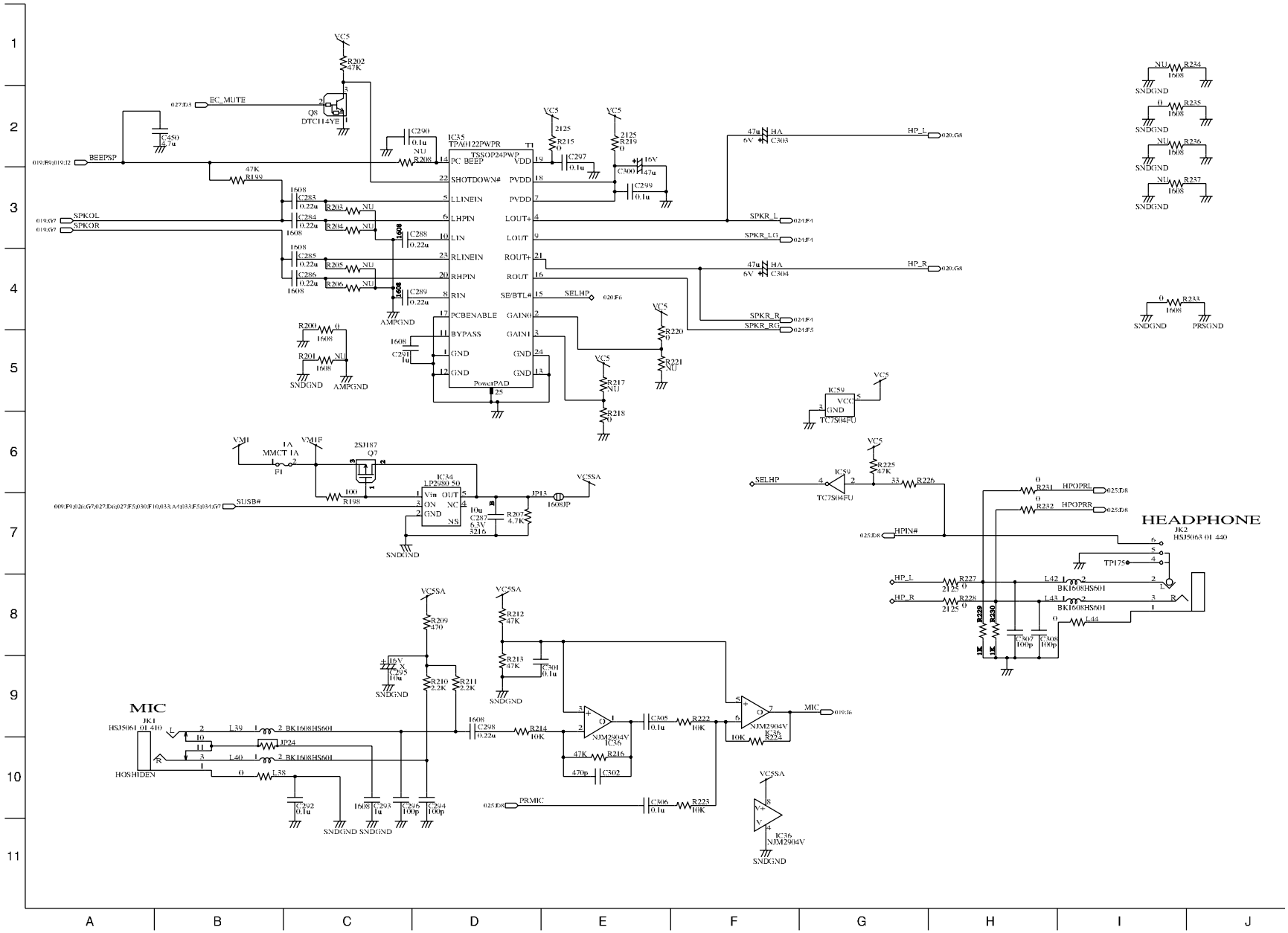

Main 21 RESET

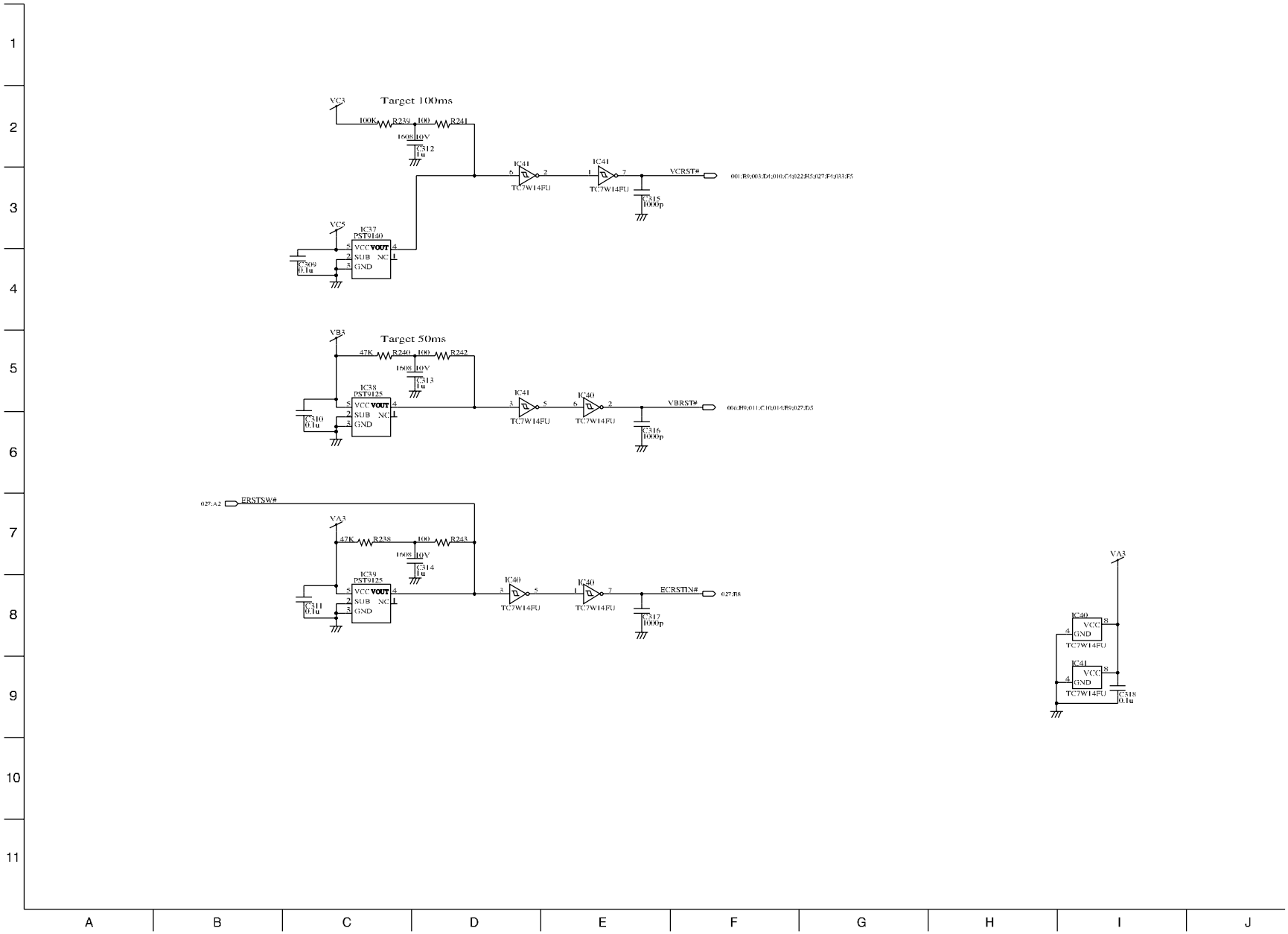

Main 22 BIOS

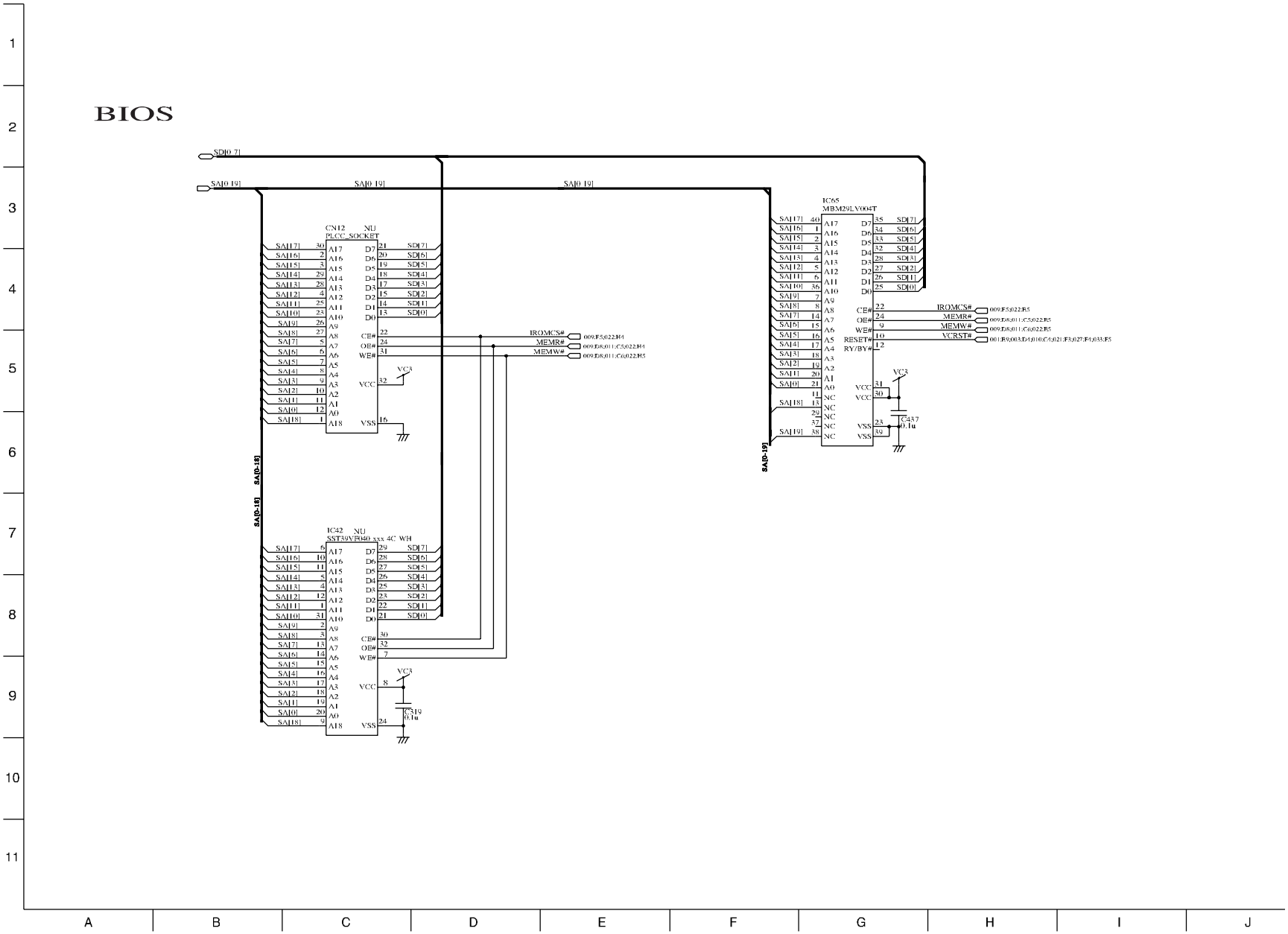
BIOS
SD[0..7]
SA[0..19]
CN12 NU
PLCC_SOCKET
IC42 NU
SST39VF040 xxx 4C WH
IC65
MBM29LV004T
IROMCS#
MEMR#
MEMW#
VCRST#
VC3
C319 0.1u
C4A7 0.1u
SA[0..18]
SA[0..19]

Main 23 SUB CN

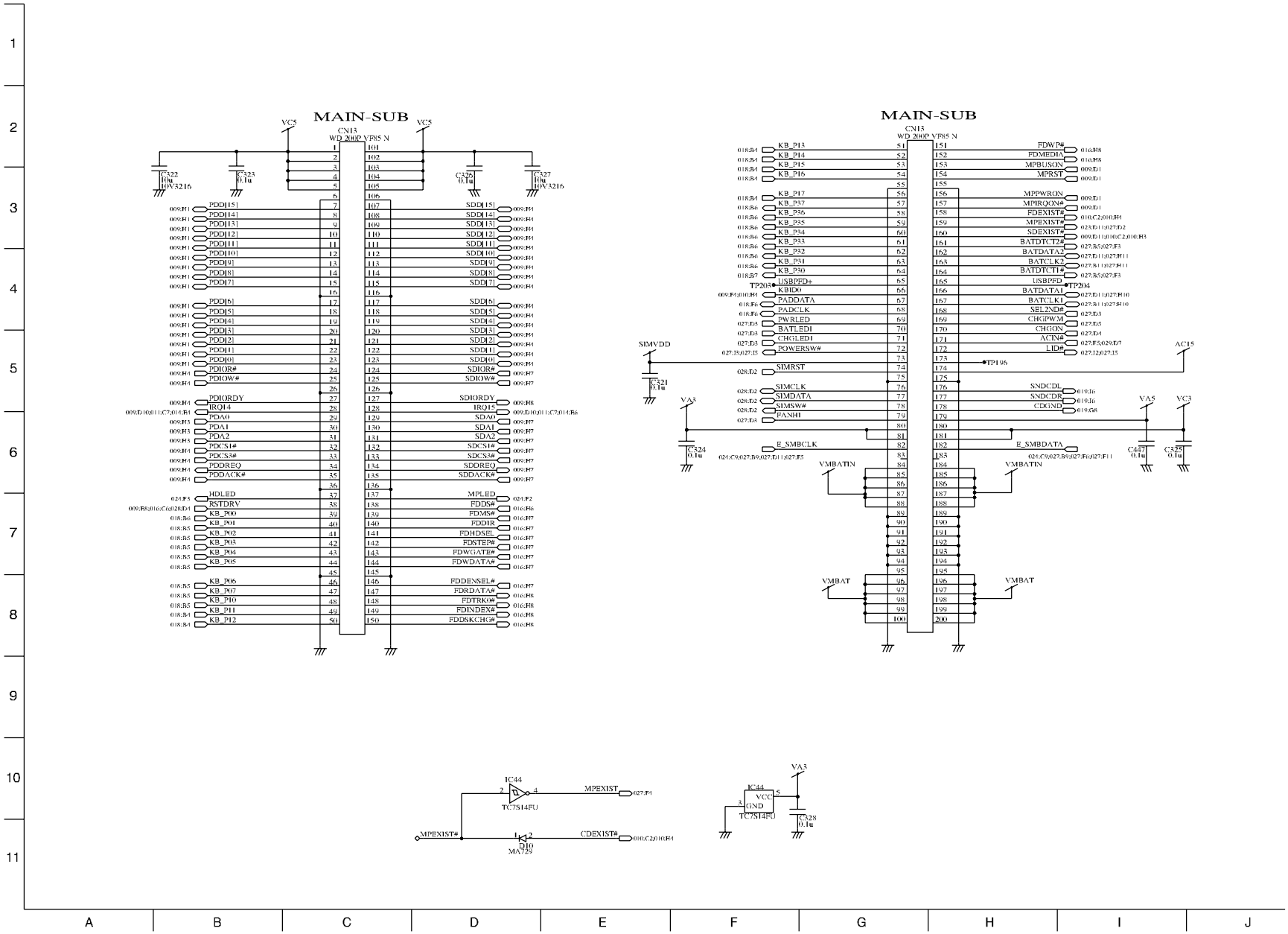

Main 24 LED CN

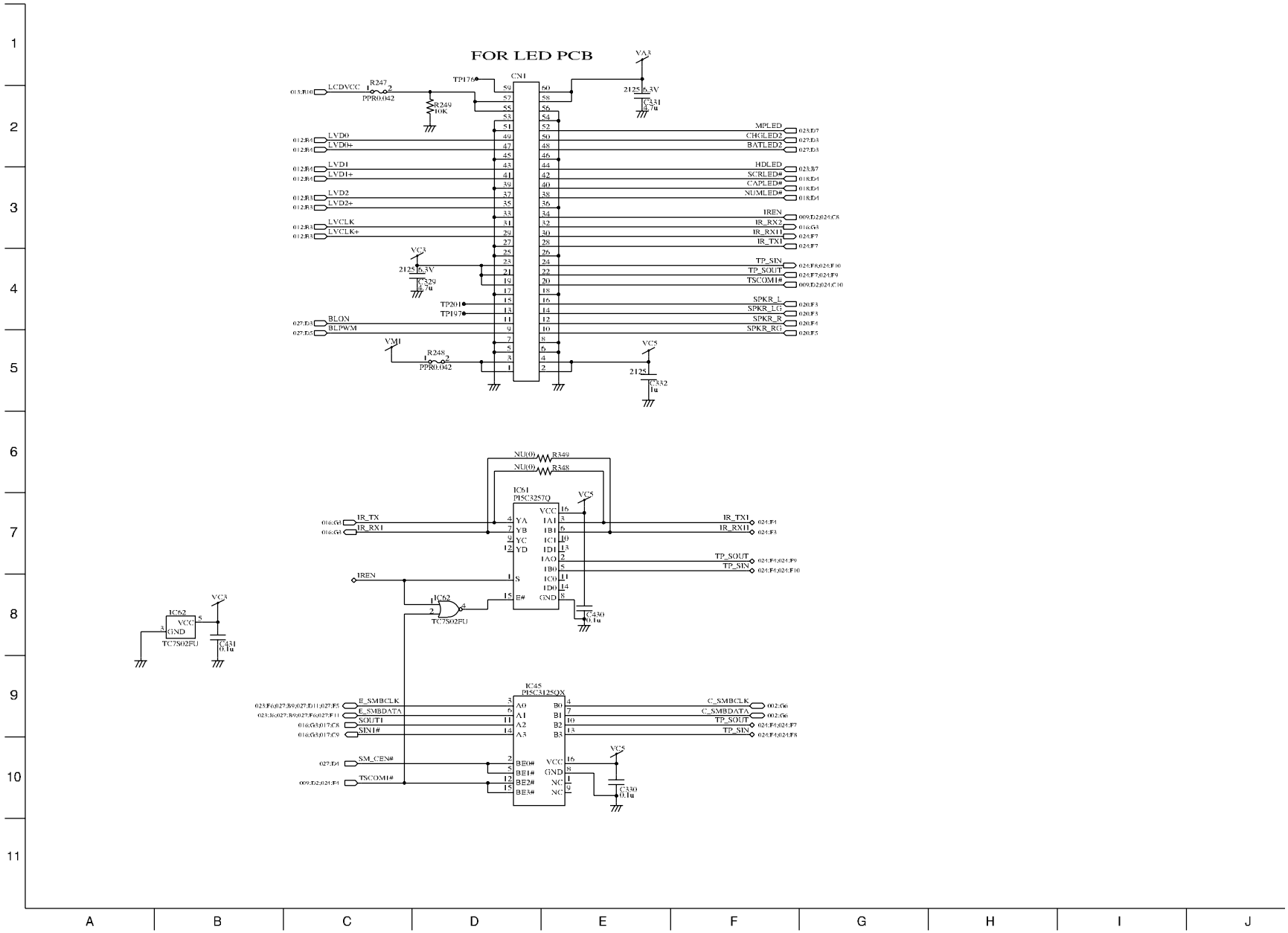

Main 25 PR CN

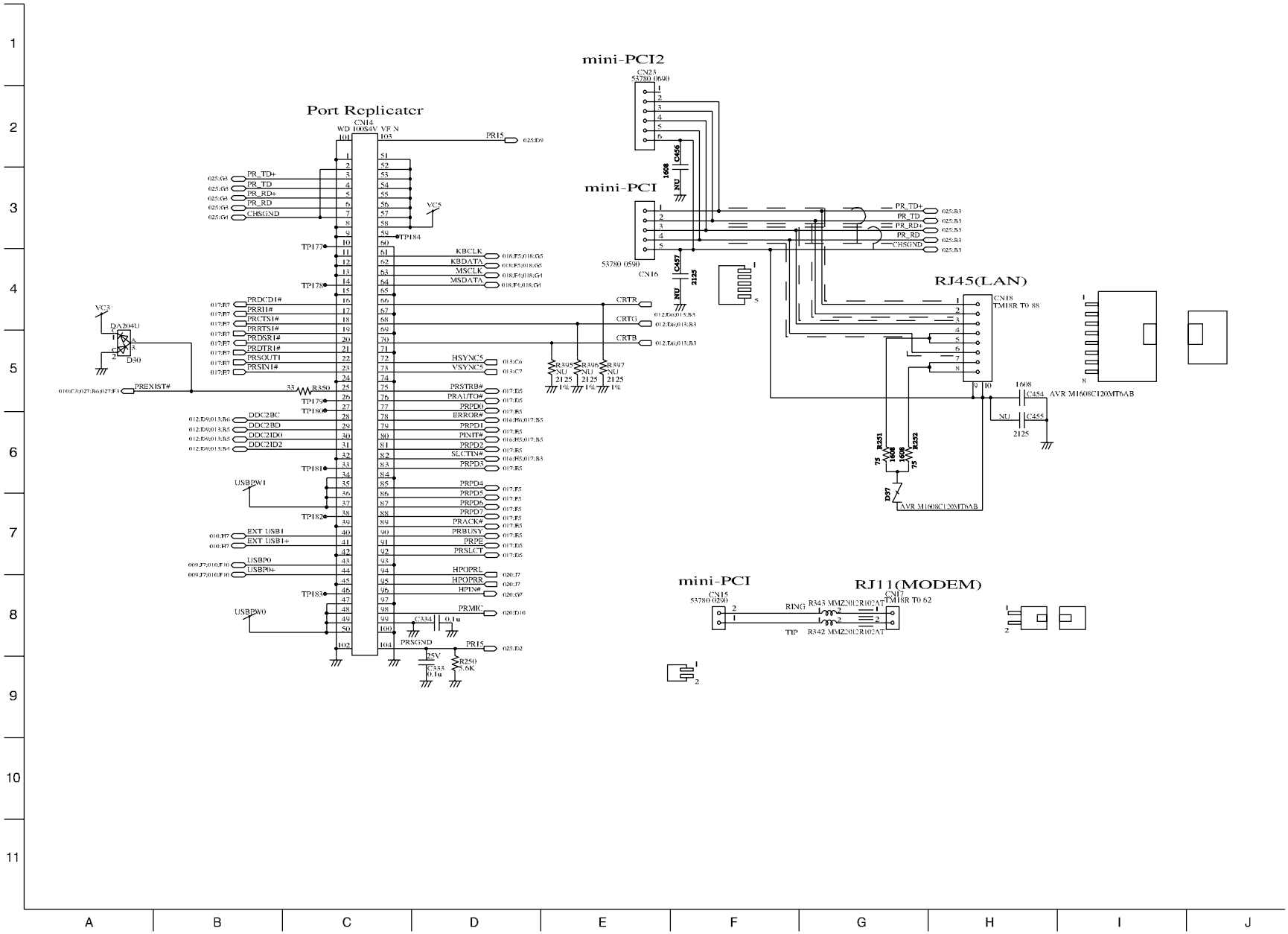

Port Replicater
CN14
WD 10054V VF N
mini-PCI2
CN23
53780 0690
mini-PCI
CN16
53780 0590
RJ45(LAN)
CN18
TM18R T0 88
mini-PCI
CN15
53780 0290
RJ11(MODEM)
CN17
TM18R T0 62
PR_TD+
PR_TD
PR_RD+
PR_RD
CHSGND
KBCLK
KBDATA
MSCLK
MSDATA
PRDCD1#
PRRI1#
PRCTS1#
PRRTS1#
PRDSR1#
PRDTR1#
PRSOUT1
PRSIN1#
HSYNC5
VSYNC5
PRSTRB#
PRAUTO#
PRPD0
ERROR#
PRPD1
PINIT#
PRPD2
SLCTIN#
PRPD3
PRPD4
PRPD5
PRPD6
PRPD7
PRACK#
PRBUSY
PRPE
PRSLCT
HPOPRL
HPOPRR
HPIN#
PRMIC
PRSGND
PR15
CRTR
CRTG
CRTB
PREXIST#
DDC2BC
DDC2BD
DDC2ID0
DDC2ID2
EXT USB1
EXT USB1+
USBP0
USBP0+
USBPW1
USBPW0
VC3
VC5
DA204U
D30
R350
R395
R396
R397
R250
5.6K
C334
0.1u
C333
0.1u
C456
C457
C454
C455
AVR M1608C120MT6AB
D57
R251
R252
RING
TIP
R343 MMZ2012R102AT
R342 MMZ2012R102AT

Main 26 MINI-PCI CN1

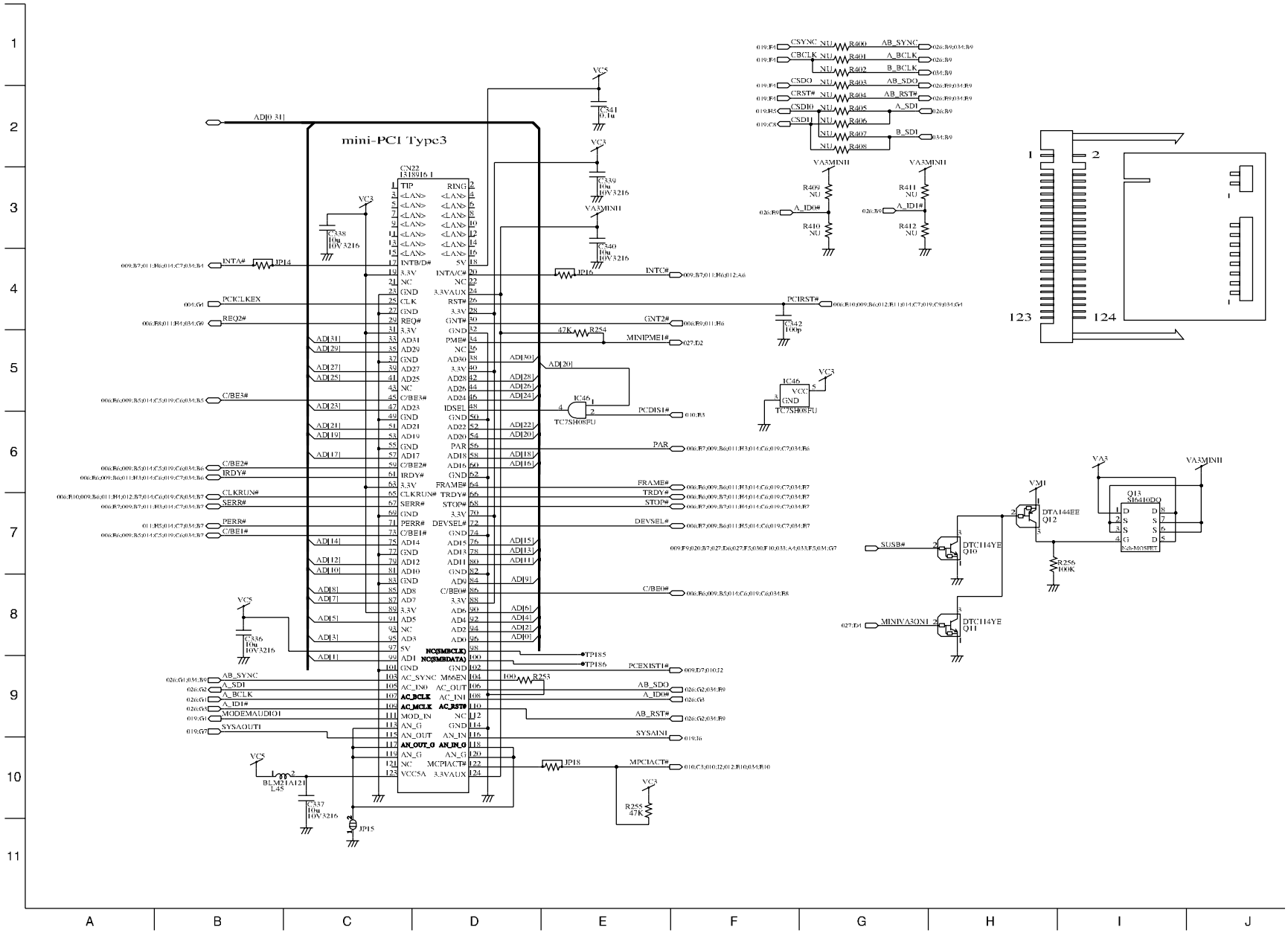

Main 27 EC

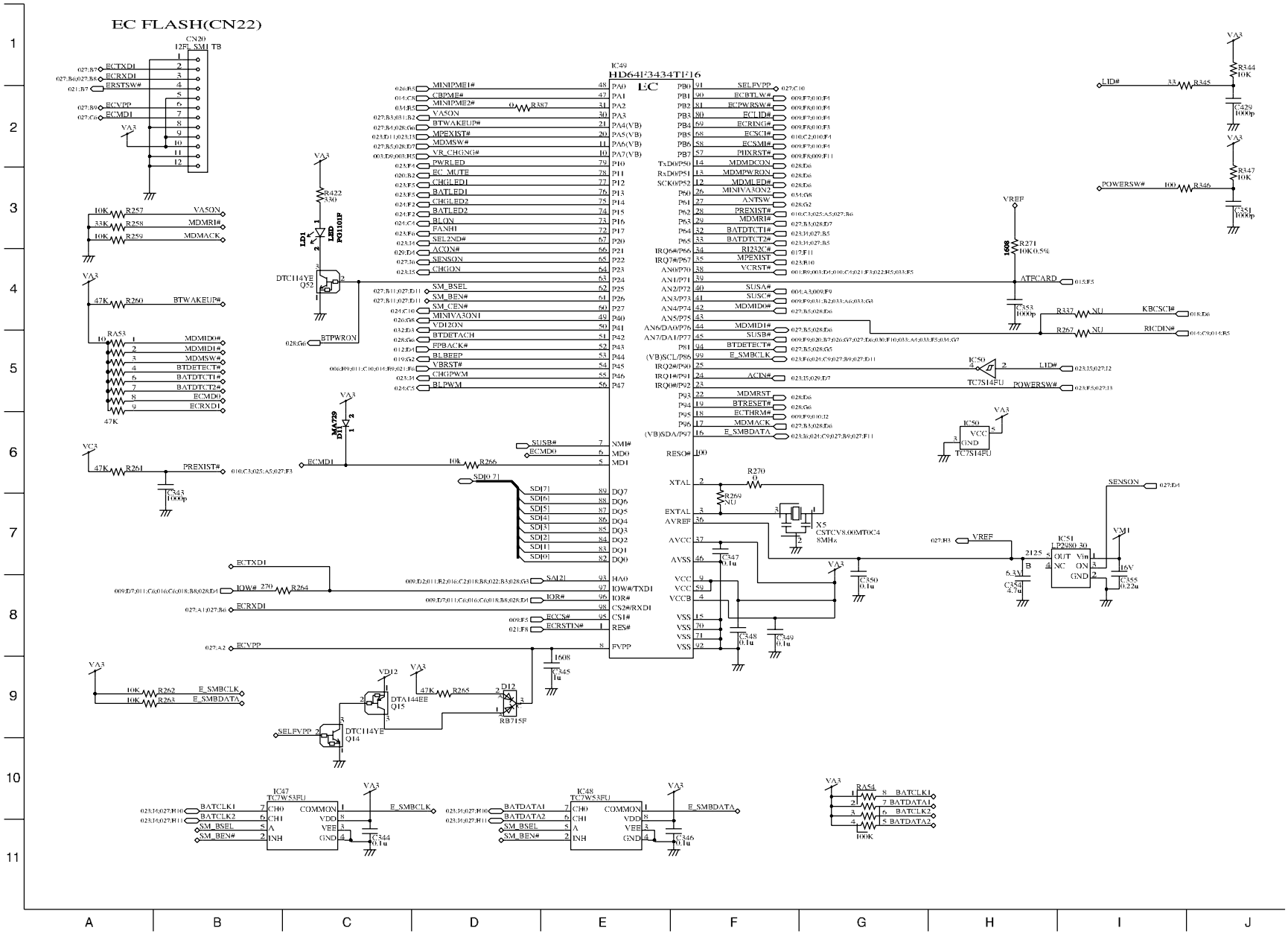
EC FLASH(CN22)
CN20
12F_SMT_TB
IC49
HD64F3434TF16
EC
IC47
TC7W53FU
IC48
TC7W53FU
IC50
TC7S14FU
IC51
LP2980-30
X5
CSTCV8.00MT0C4
8MHz
RA54
100K
R271
10K 0.5%
ATFCARD
LID#
POWERSW#
KBCSCI#
RICDIN#
SENSON
VREF
SELFVPP
E_SMBCLK
E_SMBDATA
BATCLK1
BATCLK2
BATDATA1
BATDATA2
SM_BSEL
SM_BEN#
COMMON
VDD
VEE
GND
CH0
CH1
A
INH
VA3
VM1
VD12
DTA144EE
Q15
DTC114YE
Q14
D12
RB715F
DTC114YE
Q52
LED
PG110IP
LD1
MA729
D11
RA53
MDMID0#
MDMID1#
MDMSW#
BTDETECT#
BATDTCT1#
BATDTCT2#
ECMD0
ECRXD1
BTWAKEUP#
MDMRI#
MDMACK
VA5ON
PREXIST#
ECTXD1
ECRXD1
IOW#
IOR#
ECCS#
ECRSTN#
ECVPP
ECMD1
ERSTSW#
ECTBLW#
ECPWRSW#
EC_LID#
ECRING#
ECSCI#
ECSMI#
PIXRST#
MDMDCON
MDMPWRON
MDMLED#
MINIVA3ON2
ANTSW
PREXIST#
MDMRI#
BATDTCT1#
BATDTCT2#
RI232C#
MPEXIST
VCRST#
SUSA#
SUSC#
MDMID0#
MDMID1#
SUSB#
BTDETECT#
E_SMBCLK
ACIN#
MDMRST
BTRESET#
ECTHRM#
MDMACK
E_SMBDATA
SDI0 7
SDI7
SDI6
SDI5
SDI4
SDI3
SDI2
SDI1
SDI0
SAI21
NMI#
MD0
MD1
RES0#
XTAL
EXTAL
AVREF
AVCC
AVSS
VCC
VCCB
IOW#/TXD1
IOR#
CS2#/RXD1
CS1#
RES#
FVPP
VSS
DQ7
DQ6
DQ5
DQ4
DQ3
DQ2
DQ1
DQ0
HA0
SUSB#
ECMD0
ECMD1
SM_BSEL
SM_BEN#
SM_CEN#
MINIVA3ON1
VDI2ON
BTDETACH
FPBACK#
BLBEEP
VBRST#
CHGPWM
BLPWM
MINIPME1#
CBPME#
MINIPME2#
VA5ON
BTWAKEUP#
MPEXIST#
MDMSW#
VR_CHGNG#
PWRLED
EC_MUTE
CHGLED1
BATLED1
CHGLED2
BATLED2
BLON
FANH1
SEL2ND#
ACON#
SENSON
CHGON
BTPWRON
R344
10K
R345
33
C429
1000p
R347
10K
R346
100
C351
1000p
C353
1000p
R337
NU
R267
NU
R270
0
R269
NU
C347
0.1u
C348
0.1u
C349
0.1u
C350
0.1u
C354
4.7u
C355
0.22u
16V
2125
6.3V
R257
10K
R258
33K
R259
10K
R260
47K
R261
47K
R262
10K
R263
10K
R264
270
R265
47K
R266
10k
R422
330
R387
0
C343
1000p
C344
0.1u
C345
1u
C346
0.1u
1608
A
B
C
D
E
F
G
H
I
J

Main 28 WIRELESS CN

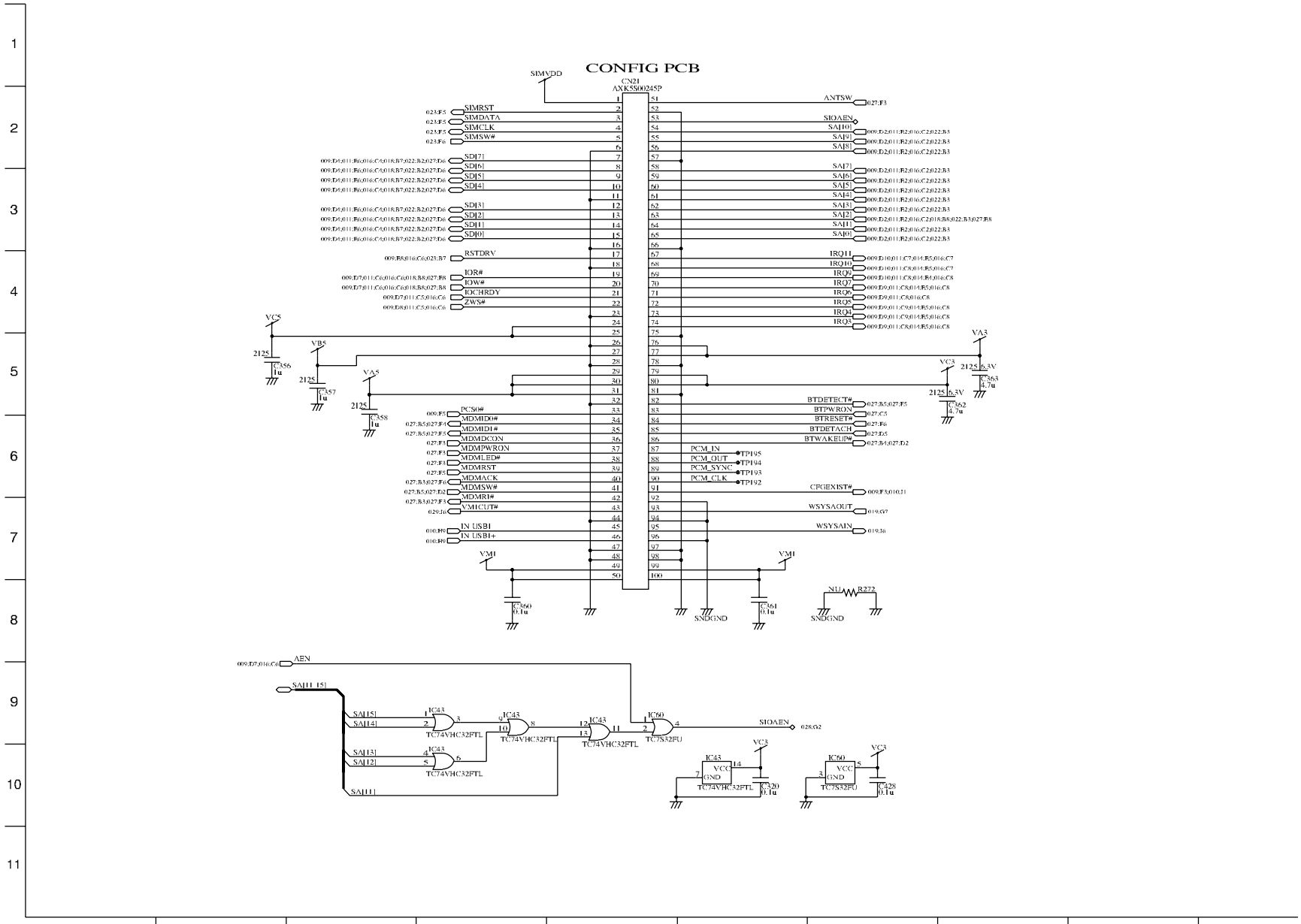

Main 29 DCIN

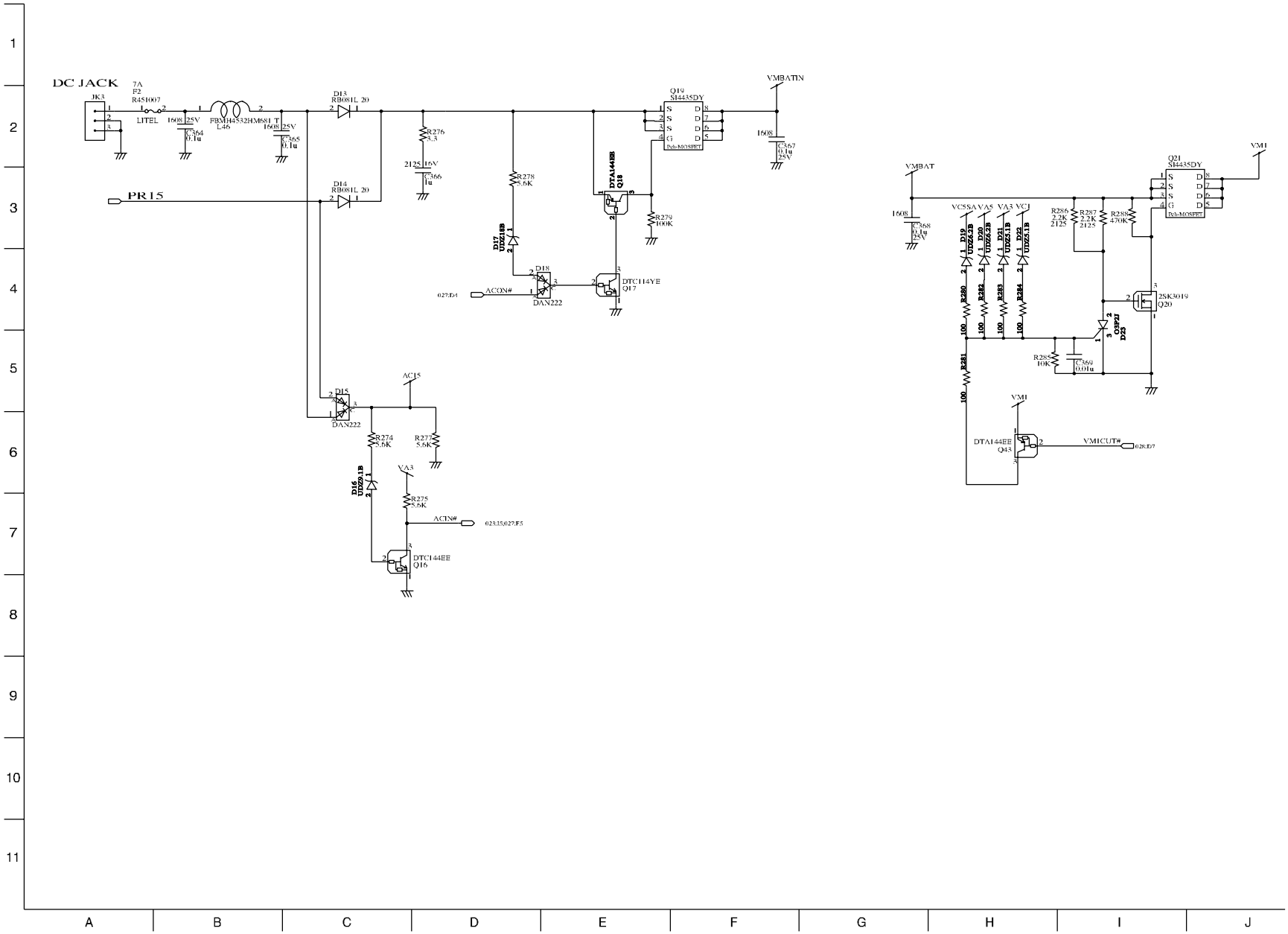
DC JACK
JK3
7A
F2
R451007
LITEL
1608 25V
C364
0.1u
FBMH4532HM681 T
L46
1608 25V
C365
0.1u
D13
RB081L 20
D14
RB081L 20
PR15
R276
3.3
2125 16V
C366
1u
R278
5.6K
D17
UDZ5.1B
D18
DAN222
027:D4
ACON#
DTA144ES
Q18
DTC114YE
Q17
Q19
SI4435DY
Pch-MOSFET
R279
100K
VMBATIN
1608
C367
0.1u
25V
D15
DAN222
AC15
R274
5.6K
R277
5.6K
D16
UDZ5.1B
VA3
R275
5.6K
ACIN#
023:J5,027:F5
DTC144EE
Q16
VMBAT
1608
C368
0.1u
25V
VC5SA VA5 VA3 VC1
D19
UDZ6.2B
D20
UDZ6.2B
D21
UDZ5.1B
D22
UDZ5.1B
R280
100
R282
100
R283
100
R284
100
R281
100
R286
2.2K
2125
R287
2.2K
2125
R288
470K
Q21
SI4435DY
Pch-MOSFET
VM1
2SK3019
Q20
D23
DP21
R285
10K
C369
0.01u
VM1
DTA144EE
Q43
VMICUT#
028:D7

Main 30 VCCORE (1.6V&1.35V)

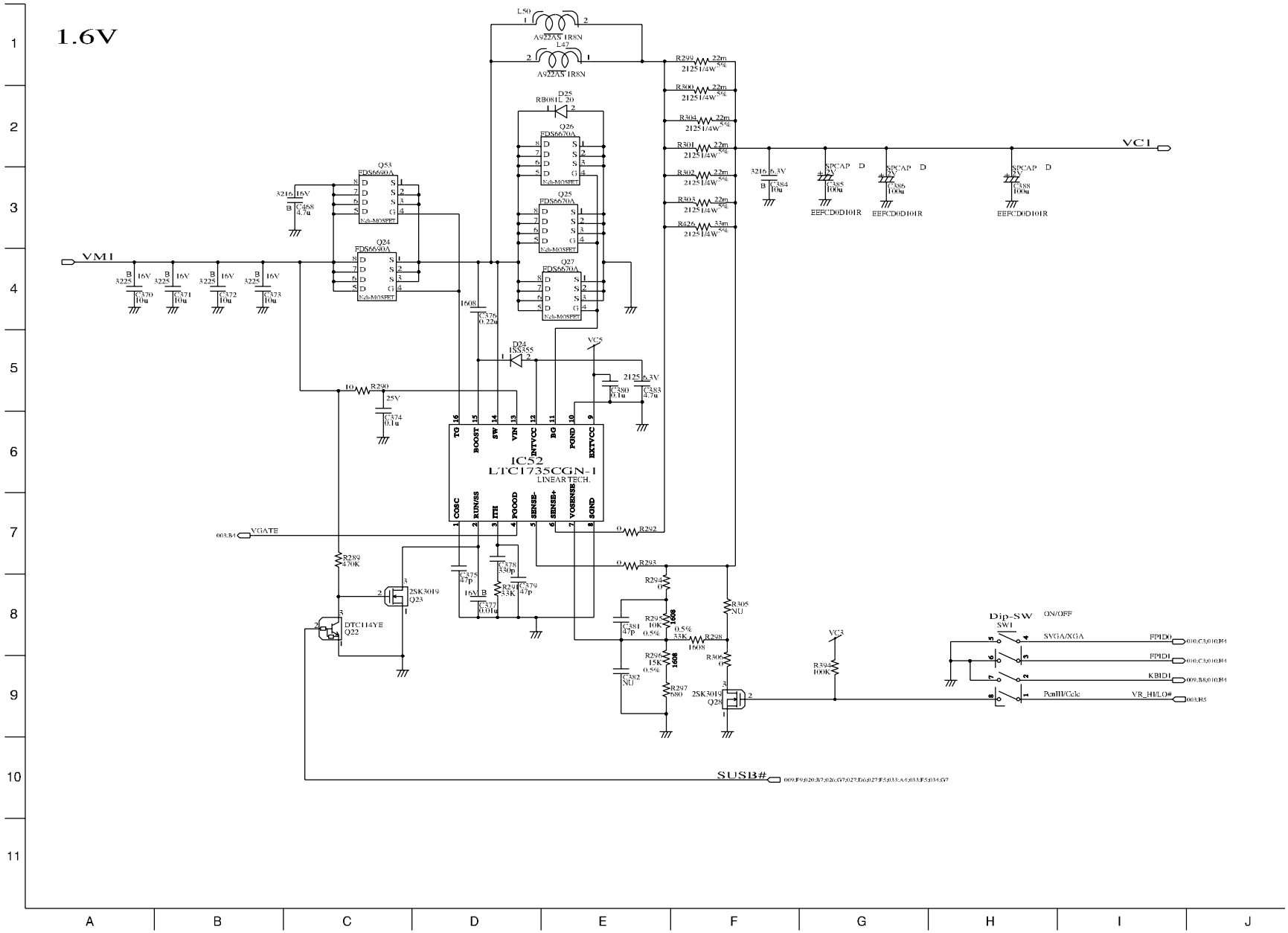

Main 31 VA3&VA5

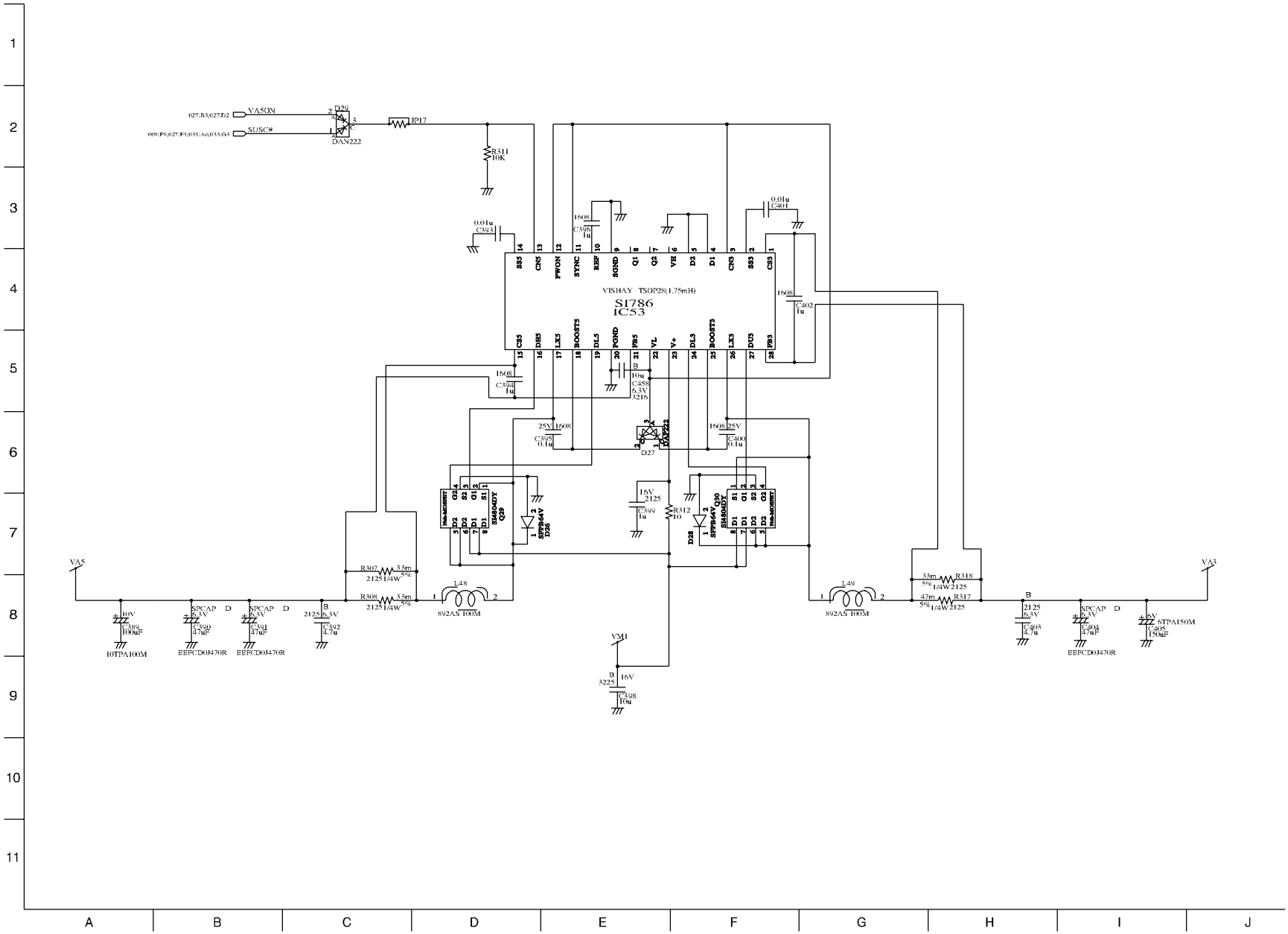

Main 32 VD12&VCT (1.5V) &VC25

12V

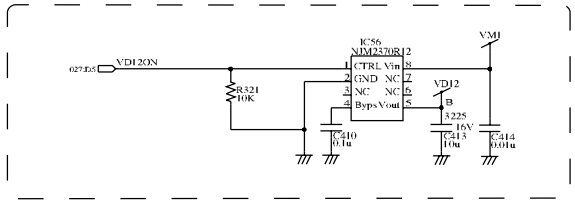

1.5V

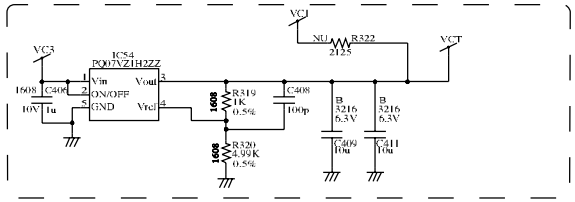

2.5V

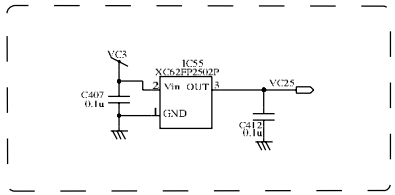

Main 33 VB3&VC3&VC5

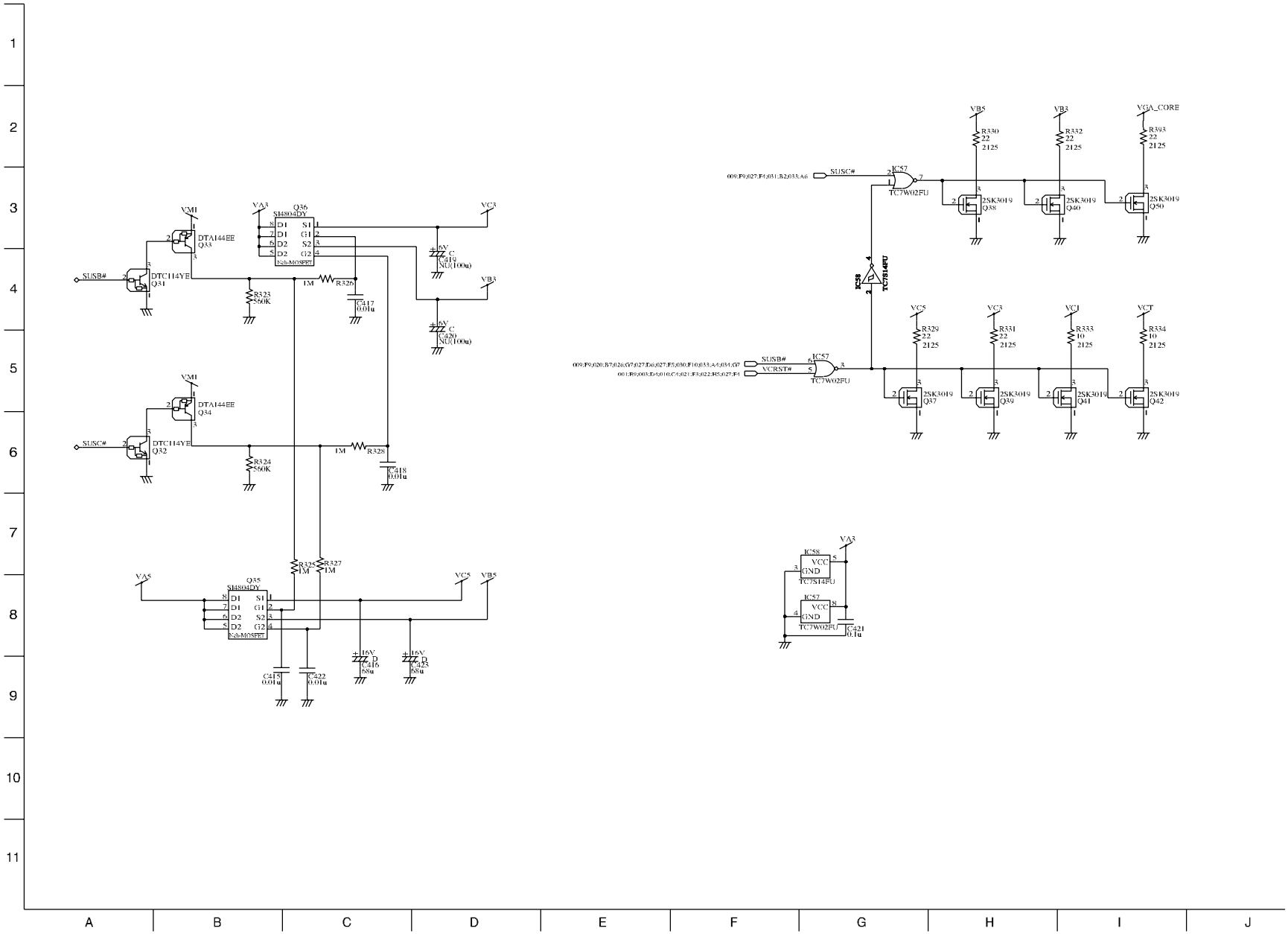

Main 34 MINI-PCI CN2

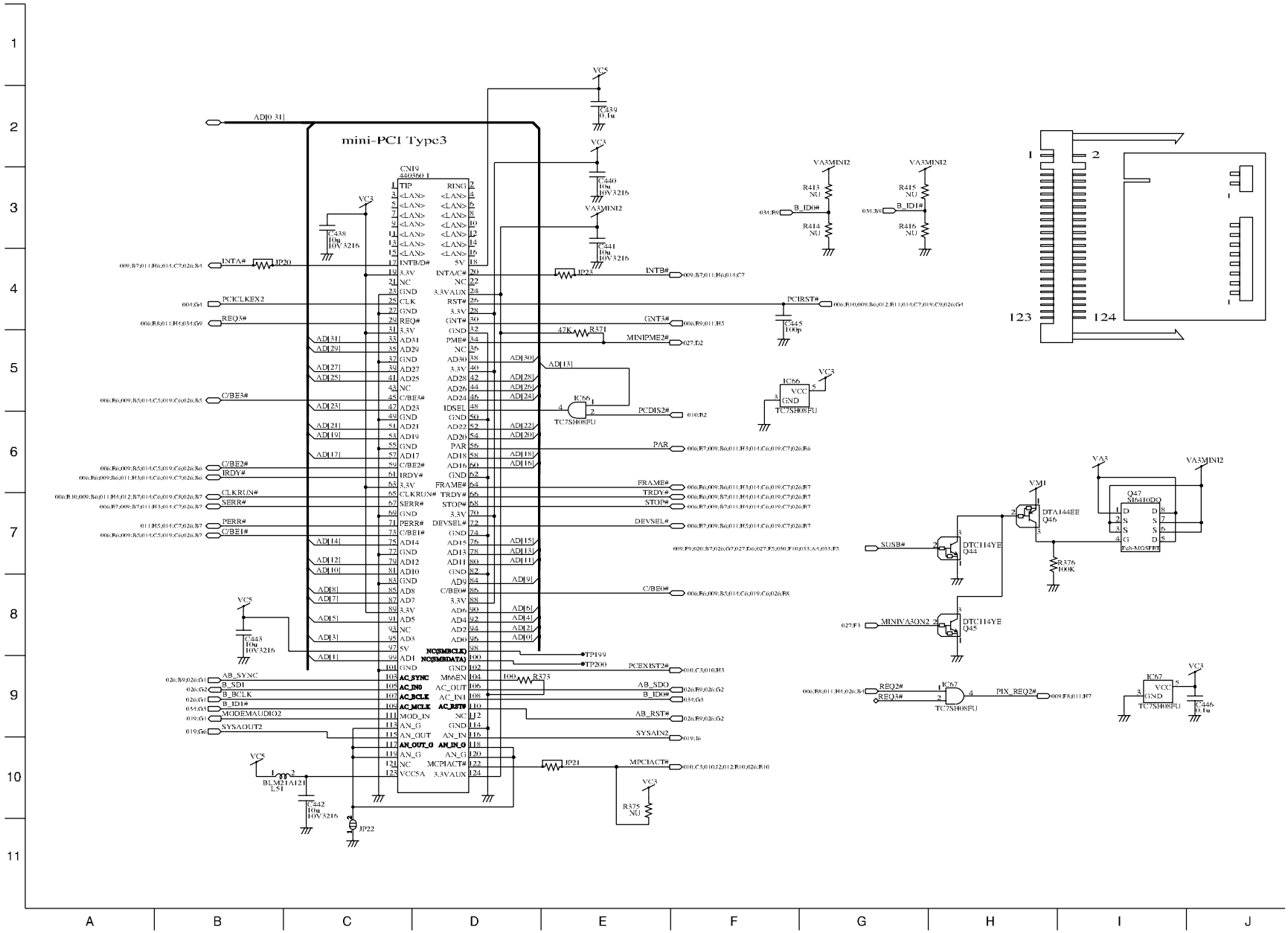

Main 35 CONNECTORS

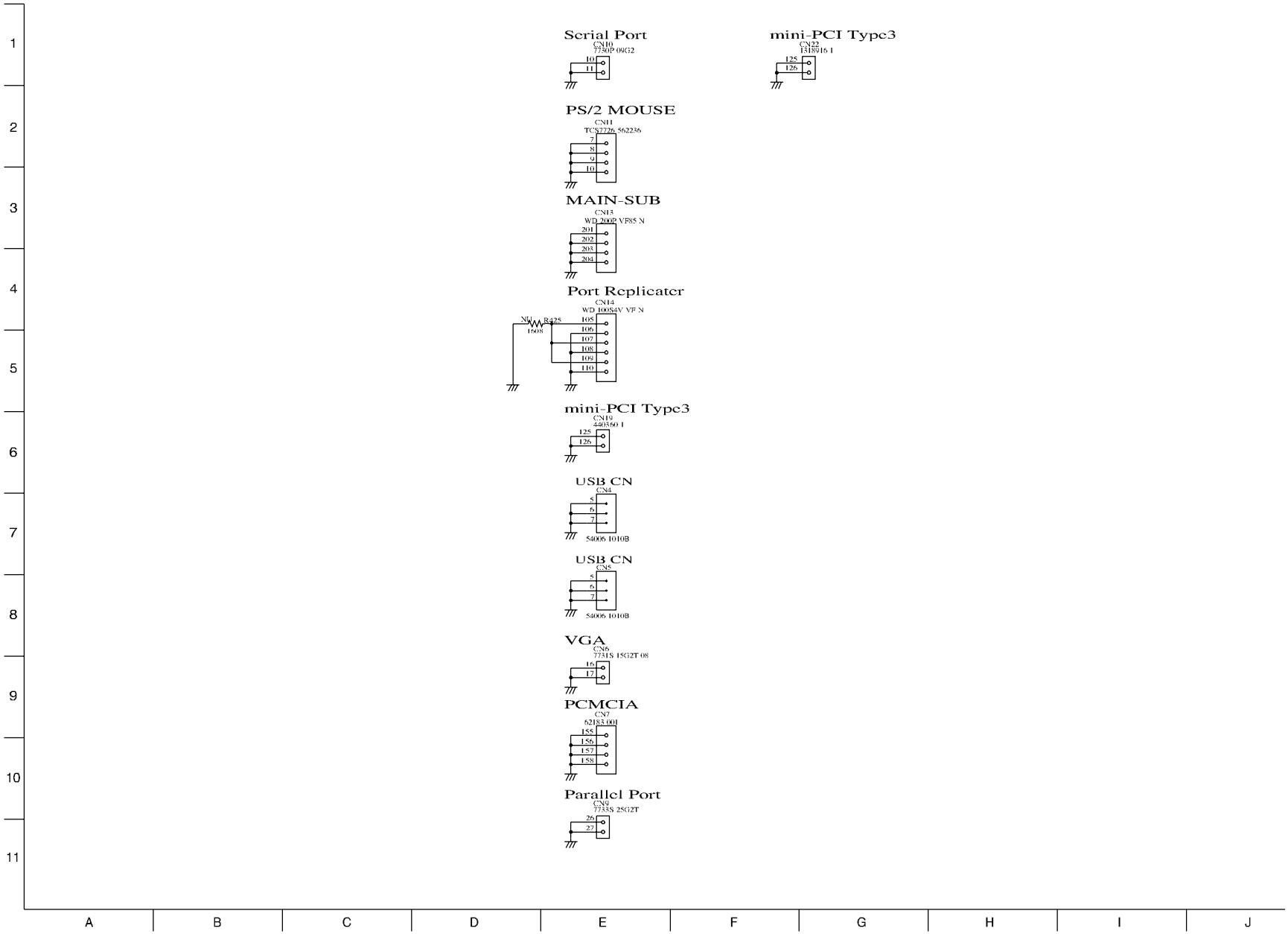

LED 1 MAIN-LED CN, LCD DN, IrDA

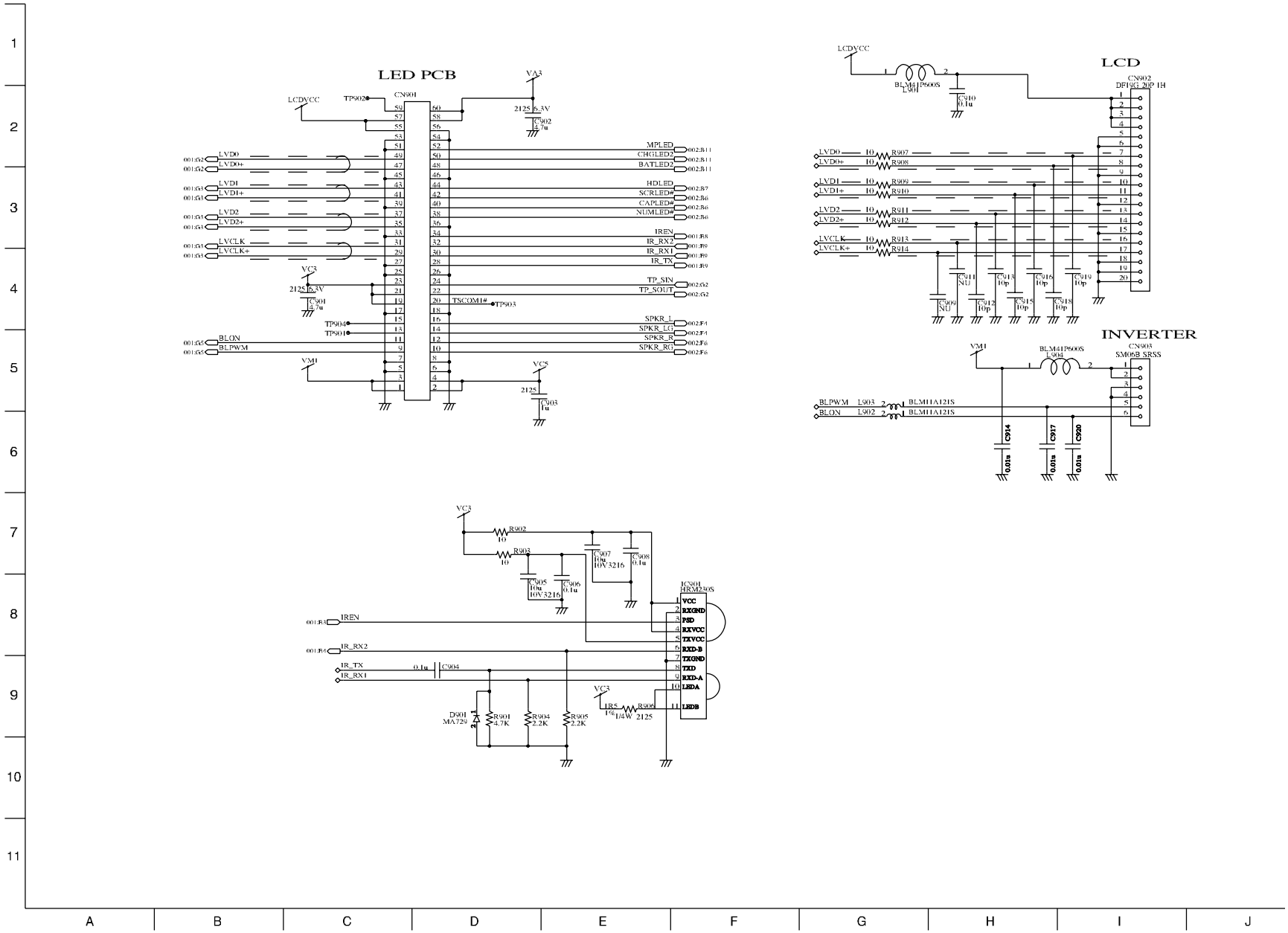

LED 2 SPEAKER

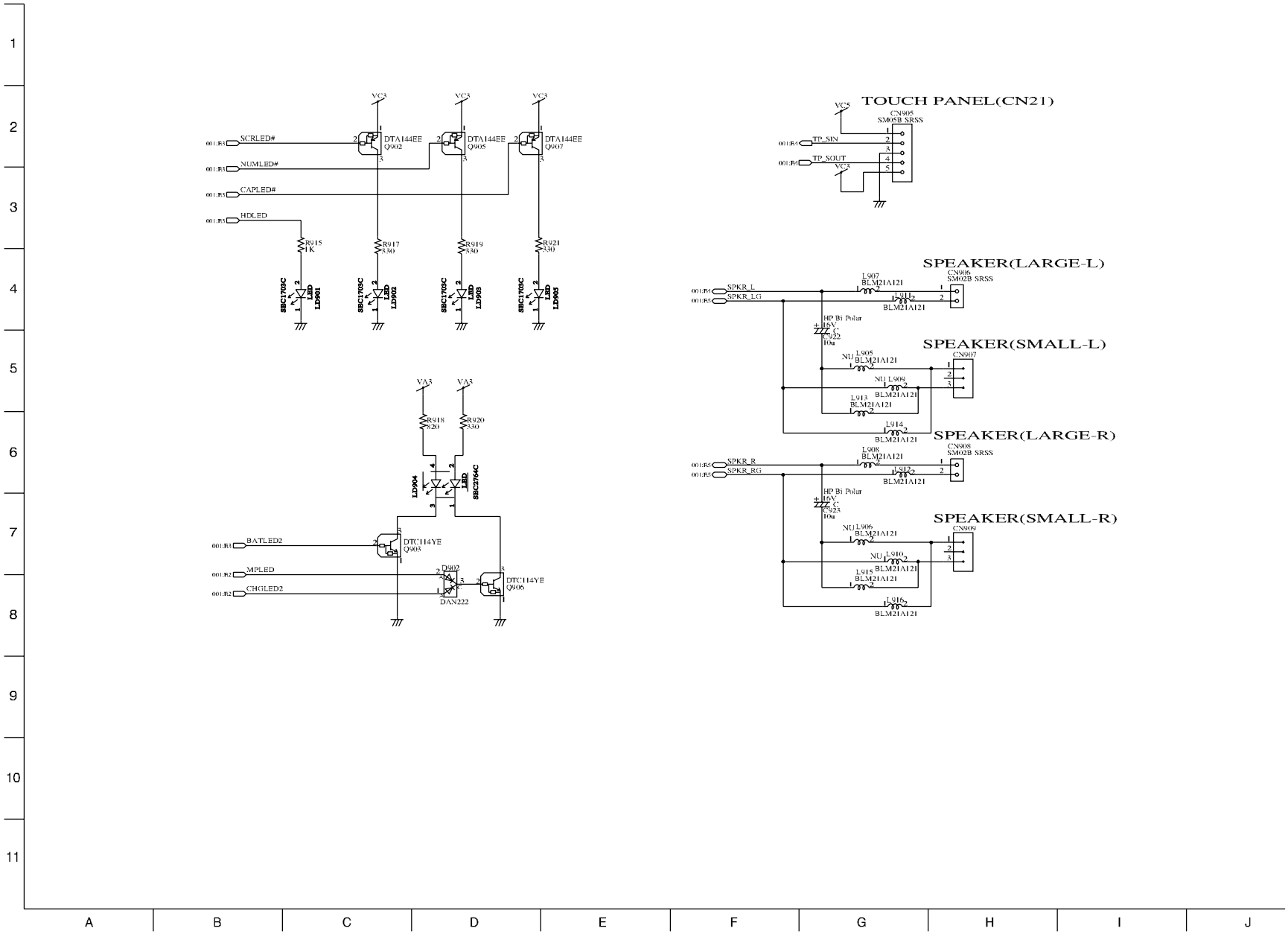

Sub 1 SUB-OTHER BOARD CN

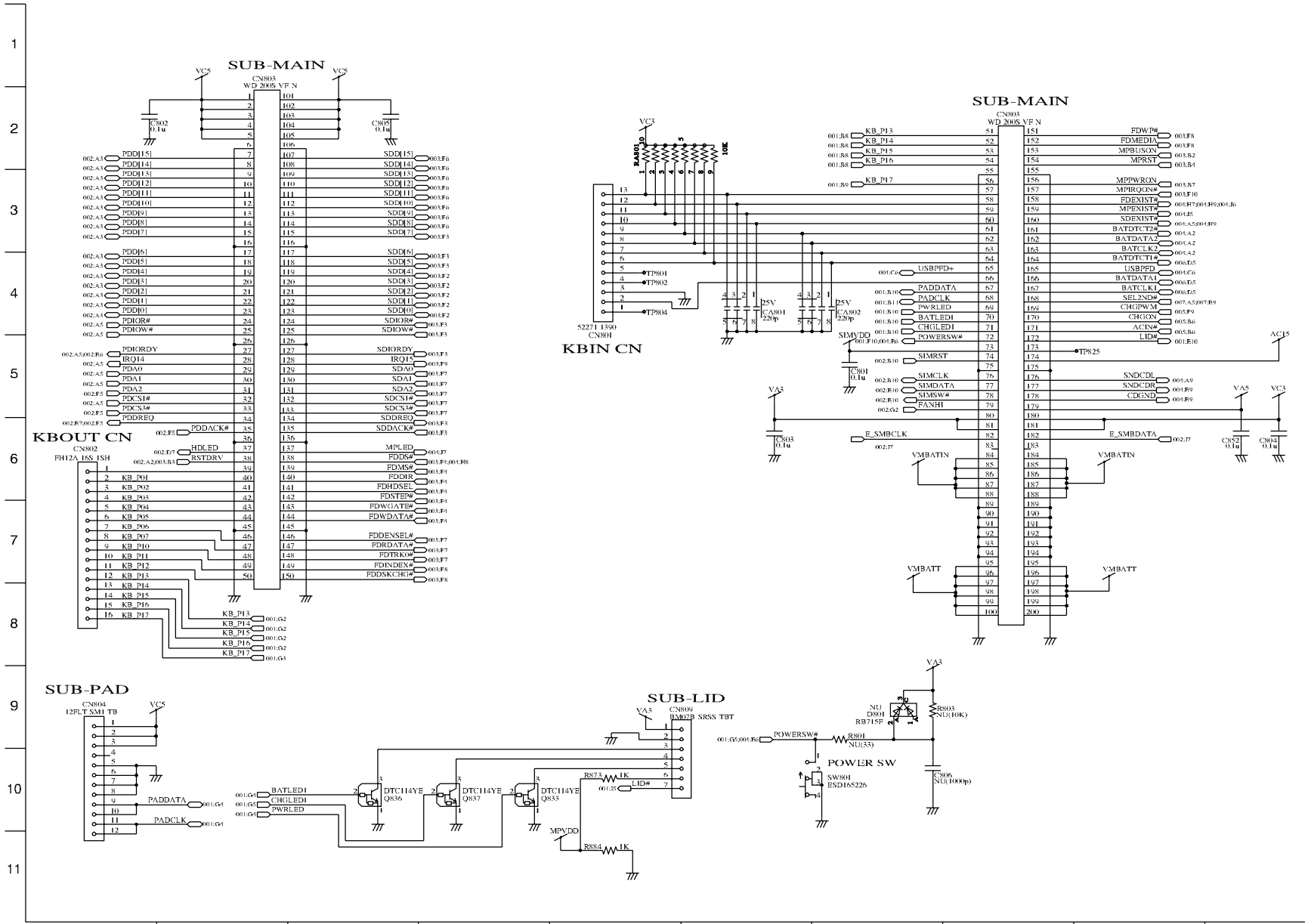

Sub 2 HDD/Smart Card/Wireless security CN

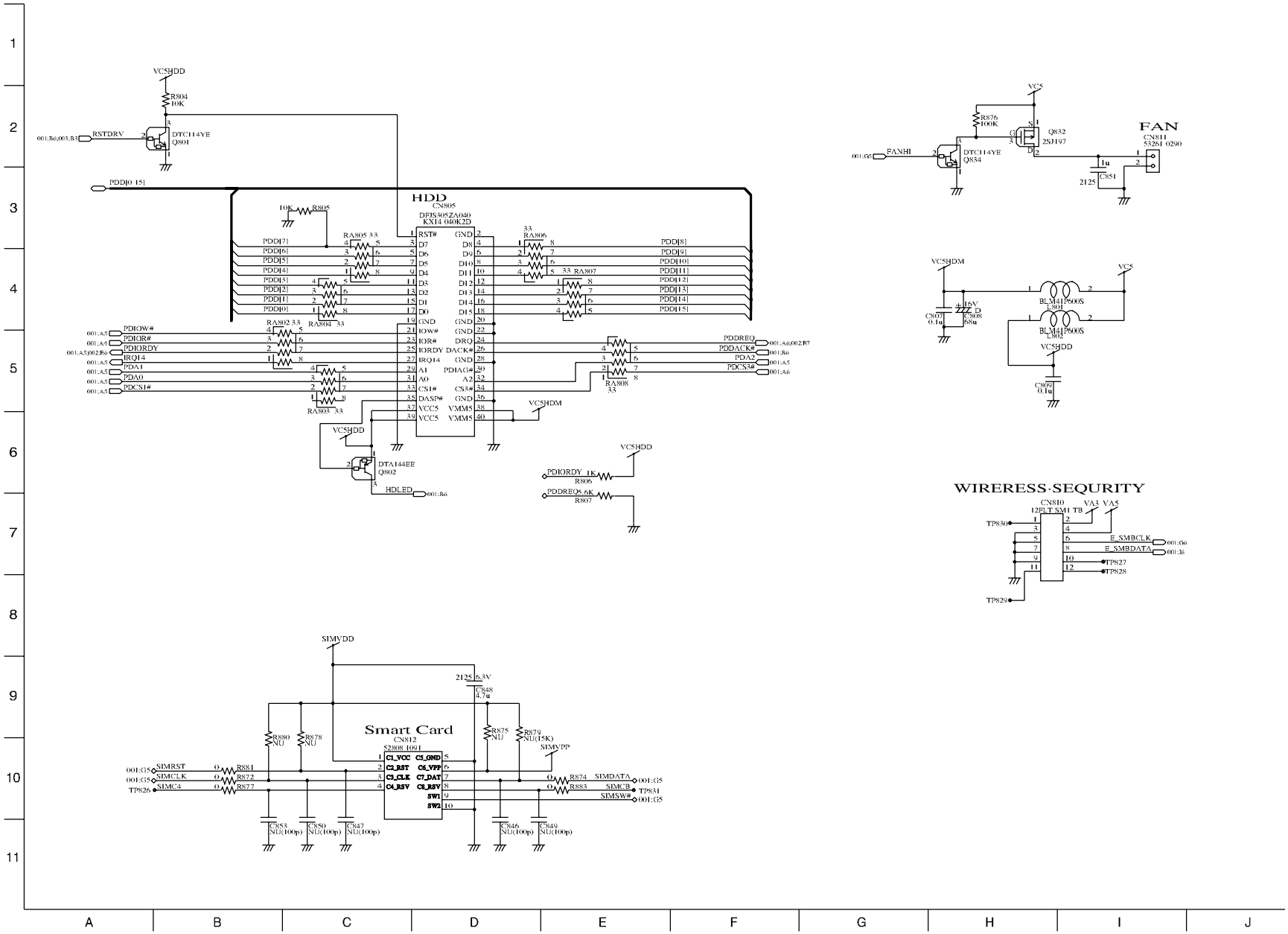

Sub 3 MP BUS Buffer

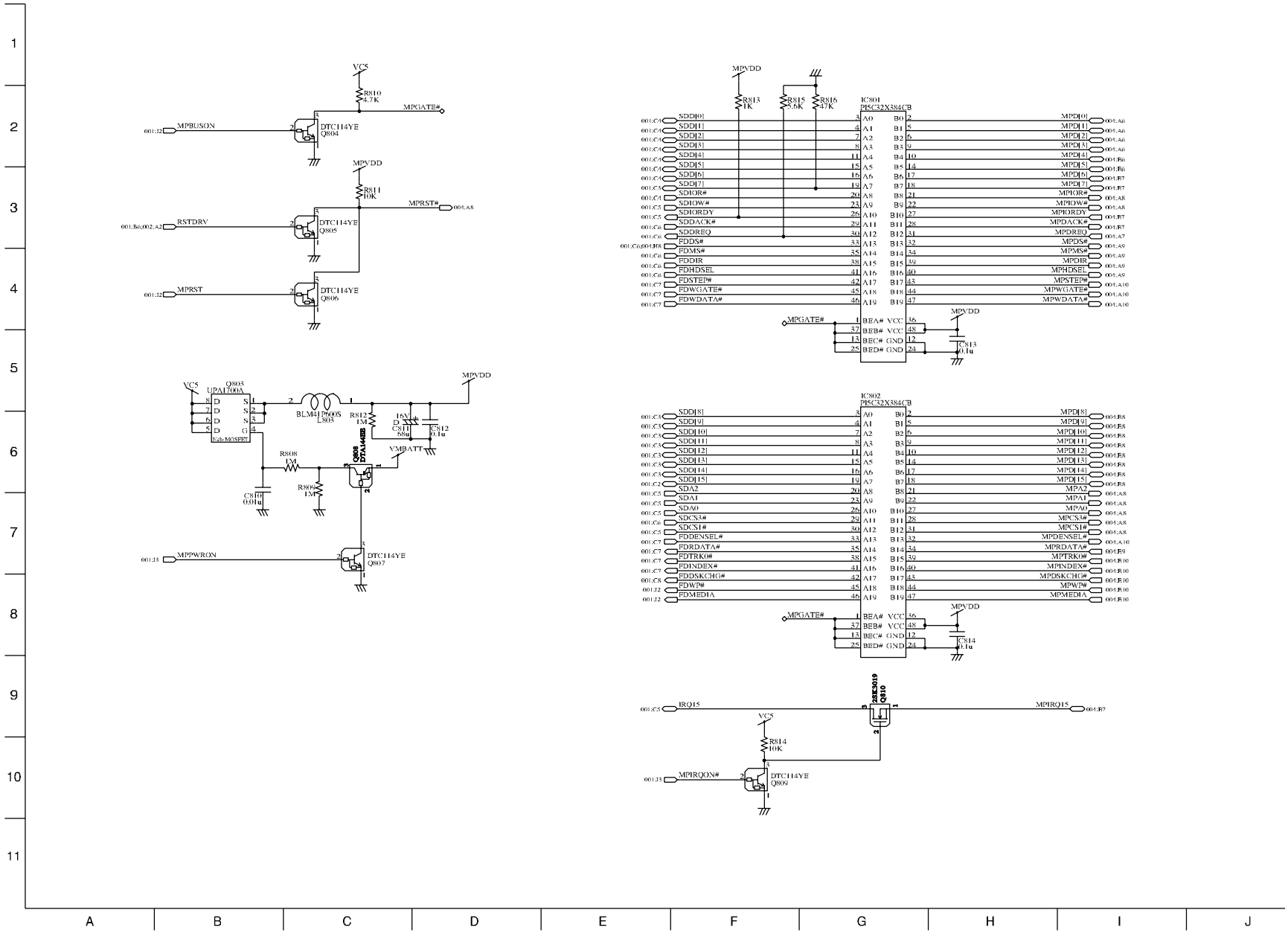

Sub 4 MP CN

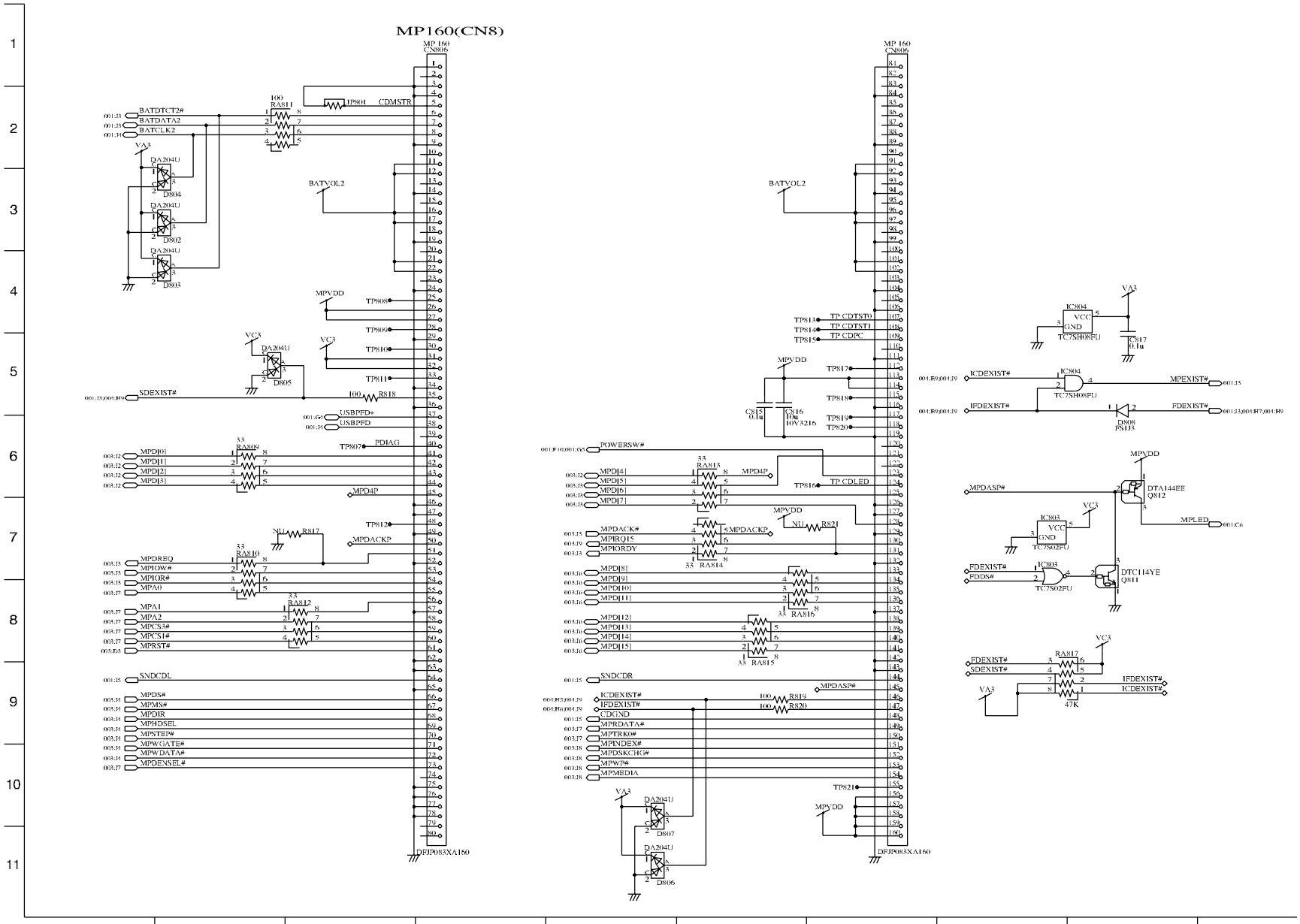

MP160(CN8)
MP 160
CN806
DFJP083XA160
BATDTCT2#
BATDATA2
BATCLK2
CDMSTR
BATVOL2
MPVDD
SDEXIST#
USBPFD+
USBPFD
PDIAG
MPD4P
MPDACKP
MPDREQ
MPIOW#
MPIOR#
MPA0
MPA1
MPA2
MPCS3#
MPCS1#
MPRST#
SNDCDL
MPDS#
MPMS#
MPDIR
MPHDSEL
MPSTEP#
MPWGATE#
MPWDATA#
MPDENSEL#
POWERSW#
MPDACK#
MPIRQ15
MPIORDY
MPDASP#
ICDEXIST#
IFDEXIST#
CDGND
MPRDATA#
MPTRK0#
MPINDEX#
MPDSKCHG#
MPWP#
MPMEDIA
TP CDTST0
TP CDTST1
TP CDPC
TP CDLED
IC804
TC7SH08FU
IC803
TC7S02FU
DTA144EE
Q812
DTC114YE
Q811
MPEXIST#
FDEXIST#
MPLED
FDDS#
SDEXIST#

Sub 5 Charger

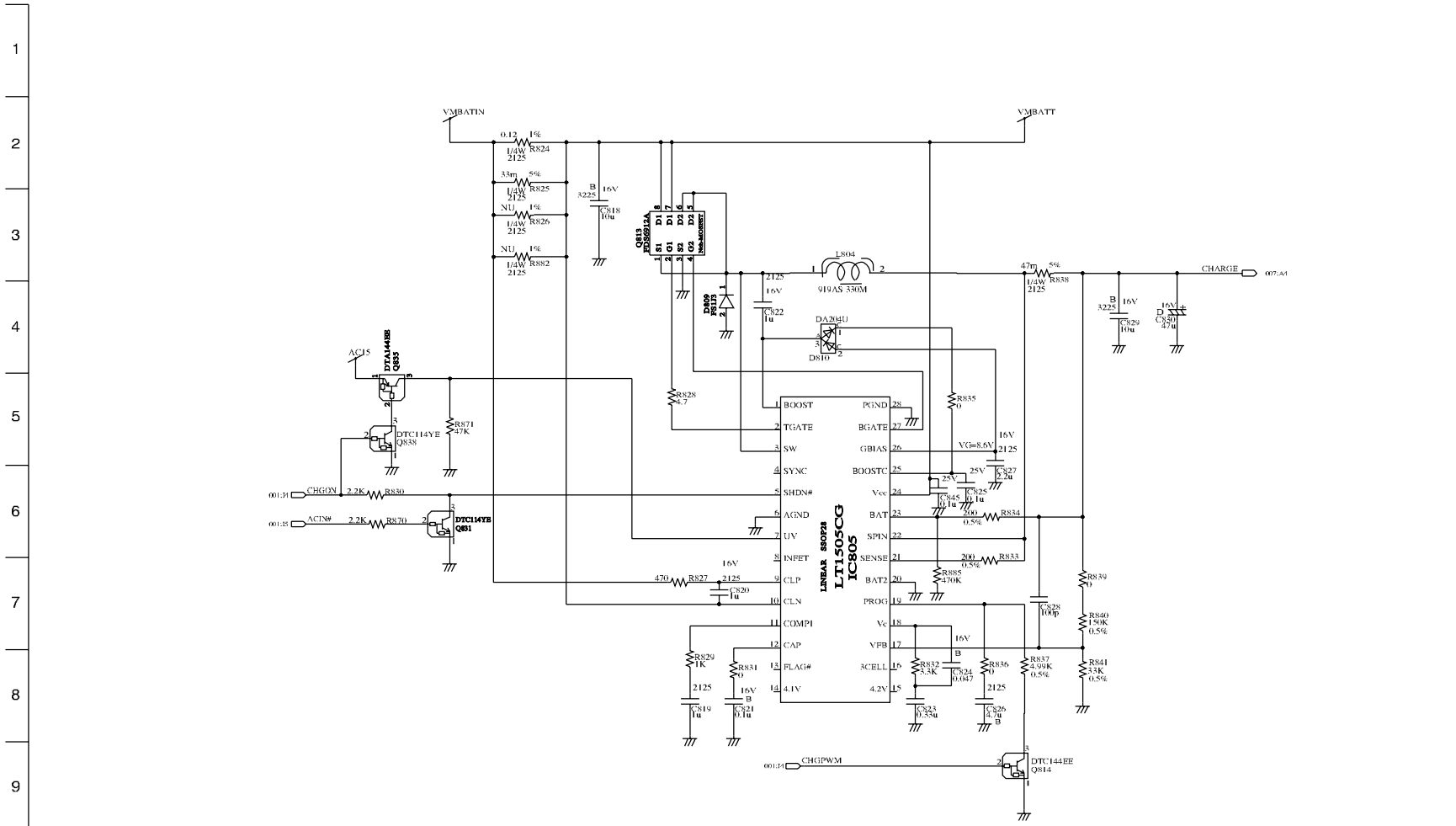

Sub 6 Main Battery

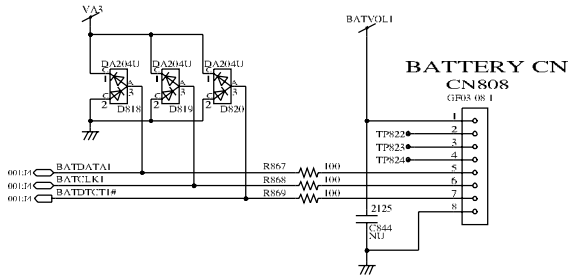

Sub 7 Battery Selector

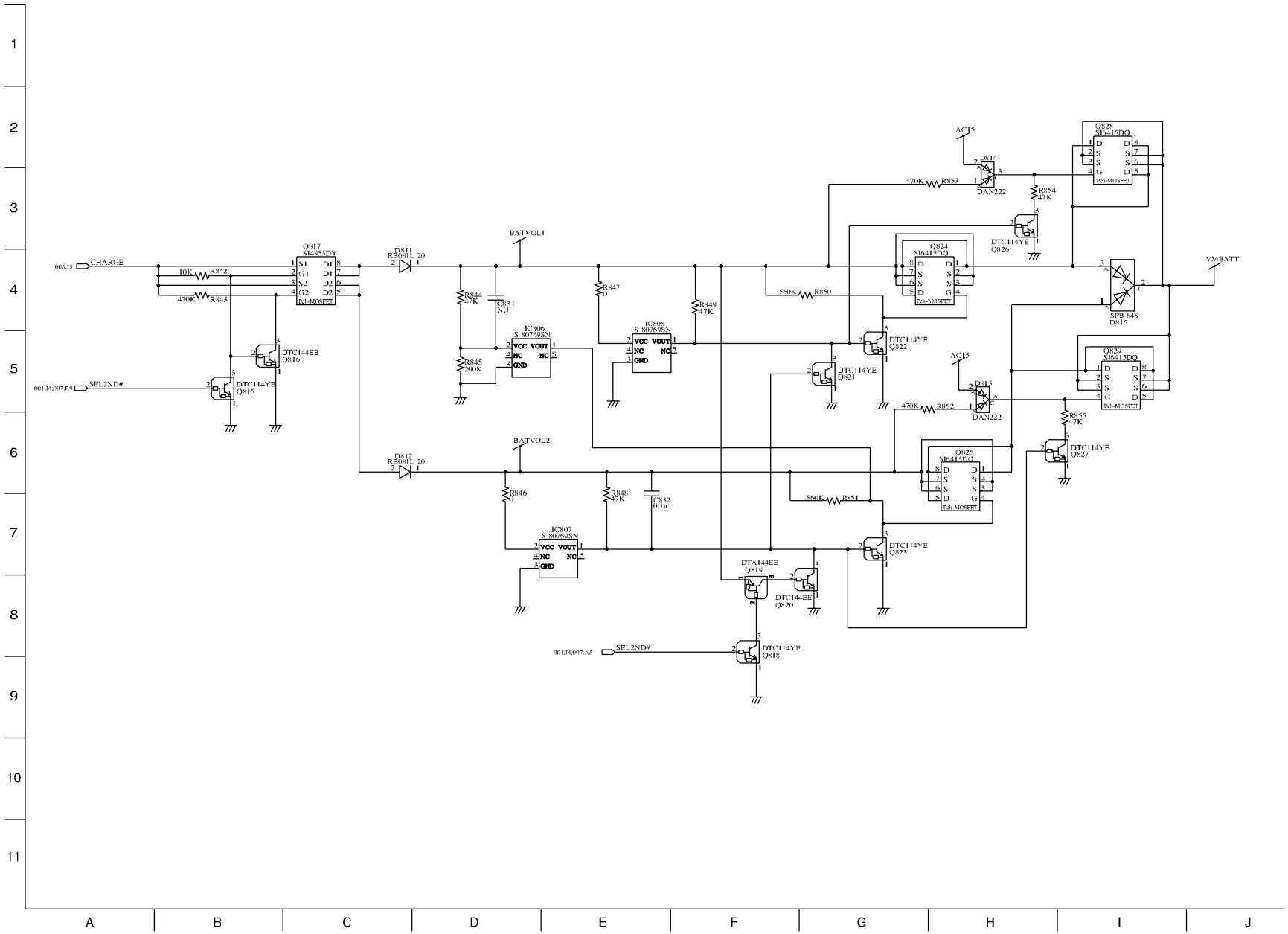

PAD

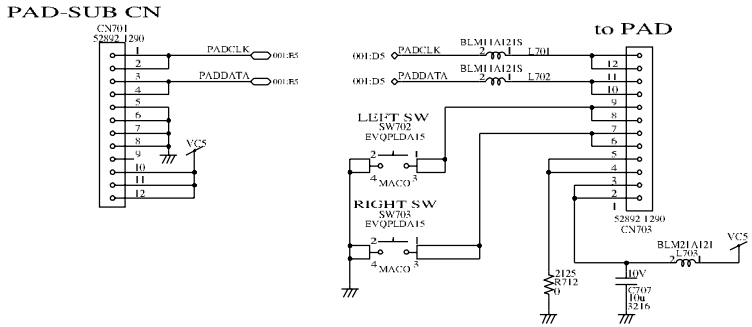
PAD-SUB CN
CN701
52892-1290
PADCLK
PADDATA
VC5
to PAD
BLM11A121S
L701
L702
LEFT SW
SW702
EVQPLDA15
RIGHT SW
SW703
EVQPLDA15
MACO
52892-1290
CN703
BLM21A121
L703
10V
C707
10u
3216
2125
R712
0

LID

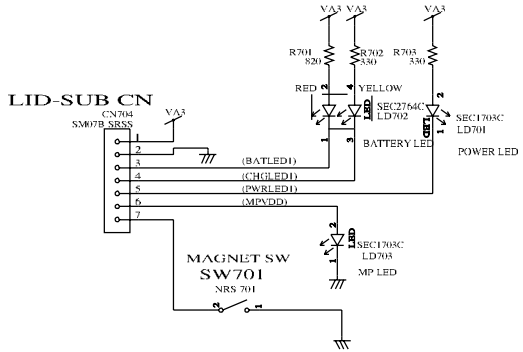
LID-SUB CN
CN704
SM07B_SRSS
VA3
VA3
VA3
VA3
R701
820
R702
330
R703
330
RED
YELLOW
SEC2764C
LD702
SEC1703C
LD701
BATTERY LED
POWER LED
(BATLED1)
(CHGLED1)
(PWRLED1)
(MPVDD)
SEC1703C
LD703
MP LED
MAGNET SW
SW701
NRS 701